GUILD ◆ EDITION

1979 Celebrating 40 Years 2019

Woodsmith®

Woodsmith.com

Vol. 41/ No. 244

ALL-IN-ONE WORKSTATION FOR THE SMALL SHOP

2 Layout Tools No Shop Should be Without

Sliding Dovetails— 3 Techniques for Your Router

Vacuum Stabilizing— Rescue Punky Wood

Woodpeckers®

The Most Trustworthy Tool in Your Shop

Success in the workshop depends on accuracy in your machinery set up, layout work, and assembly checks. All three jobs call for an accurate, well-made square, and here are several to choose from.

The cores of our squares are one precisely machined piece. ***Square*** is determined by our CNC milling centers and verified by our computer controlled optical inspection system. The cheeks added to this central core are narrower by a quarter of an inch, forming a shoulder not found in traditional square designs. The shoulder keeps your square on the edge of a board without a hand from you. We use this same fundamental design in squares from 6" to 26" and with two different core materials.

Our familiar anodized aluminum squares excel at checking cabinet and furniture assemblies as well as striking lines square. Our new durable, heat-treated stainless-steel squares, with their 1/16" thick blade and laser cut scribing notches are ideal for critical measuring and marking tasks, machinery setup and checking the edges of stock.

The precise scale graduations on Woodpeckers squares are permanently laser-engraved, high contrast markings, designed to last for generations.

We guarantee our squares to ±0.0085° for the life of the tool. If you ever find your square outside that tolerance, we'll fix it or replace it.

Woodpeckers, LLC • Strongsville, Ohio • 800.752.0725 • ***woodpeck.com***

Sawdust

One aspect of woodworking that I particularly enjoy is learning the history behind a certain style or type of furniture. Sometimes, that history has a direct bearing on the way a project is constructed. For example, campaign furniture was built to be easily transported during military campaigns. Other times, the history of a project has more to do with how it was used than how it was made. The shadow boxes on page 18 of this issue are a good example of this.

While we were designing and building this project, I did a little background research on the history of shadow boxes. Although their exact origin is a subject of some debate, shadow boxes were (and still are) used by retired members of the military to display their medals and insignia. These items would often be stored in the shallow, top tray of the serviceman's foot locker or chest. Then upon retiring, they were placed behind glass in a similar type of tray or box that could be hung on the wall.

But there's another aspect to this story that I found interesting. According to a maritime superstition, when disembarking from a ship, it's considered bad luck for a sailor's shadow to touch land before he does. By carrying his identifying insignia — a metaphorical shadow — in a box or chest, the sailor would ensure that he touched land before his "shadow" did. Now, I don't know if there's any truth to this, but it sure makes for a great story.

WOODSMITH WORKSHOP. Switching from the past to the future, I'm excited to announce our first-ever live woodworking event we're calling *Woodsmith Workshop*. On September 30th and October 1st of this year, you'll have the opportunity to gather with like-minded woodworkers for two solid days of in-person woodworking classes. You'll learn from woodworkers Matt Cremona, Anne Briggs, James Hamilton, and George Vondriska, as well as the cast of the *Woodsmith Shop TV Show*, Phil Huber, Chris Fitch, and Logan Wittmer. In addition to great food, the event will be held at a great venue — Living History Farms in Urbandale, Iowa. In order to ensure that you'll have a chance to personally meet and talk to the various speakers, attendance is limited.

WOODSMITH UNLIMITED. One other thing that I'd like to mention is the launch of our membership program — *Woodsmith Unlimited*. As a member, along with your subscription, you'll have digital access to all the back issues of the magazine. You'll also receive *Woodworking Essentials* (our weekly video edition), all of our online education courses, and a number of other products that normally would cost several hundred dollars if purchased individually. We're even offering special, members-only, live Q&A events with the staff of *Woodsmith*. You can find more information on becoming a *Woodsmith Unlimited* member by going to *Woodsmith.com*.

Vince

Woodsmith

EDITOR Vincent Ancona
MULTIMEDIA EDITOR Phil Huber
ASSISTANT EDITORS Erich Lage, Logan Wittmer
CONTRIBUTING WRITERS Bryan Nelson, Randall A. Maxey, James Hamilton

EXECUTIVE ART DIRECTOR Todd Lambirth
SENIOR ILLUSTRATOR Dirk Ver Steeg
SENIOR GRAPHIC DESIGNERS Bob Zimmerman, Becky Kralicek
CONTRIBUTING ILLUSTRATOR Erich Lage

CREATIVE DIRECTOR Chris Fitch
PROJECT DESIGNER Dillon Baker
PROJECT DESIGNER/BUILDER John Doyle
CAD SPECIALIST Steve Johnson
SHOP CRAFTSMAN Marc Hopkins

CONTRIBUTING PHOTOGRAPHER Crayola England
SENIOR ELECTRONIC IMAGE SPECIALIST Allan Ruhnke

GROUP PUBLISHER Steven M. Nordmeyer
MANAGING DIRECTOR CLIENT SOLUTIONS Dean Horowitz 646-350-2188
PUBLISHER & MANAGING DIRECTOR CLIENT SOLUTIONS Rory Beglin 800-444-7686 ext. 242
GROUP PRESIDENT Peter H. Miller

HOME GROUP
ACTIVE INTEREST MEDIA

Woodsmith® (ISSN 0164-4114) is published bimonthly by Cruz Bay Publishing, Inc., 2143 Grand Ave, Des Moines, IA 50312.
Woodsmith® is a registered trademark of Cruz Bay Publishing.

Copyright© 2019 Cruz Bay Publishing, Inc., an Active Interest Media company. All rights reserved.

Subscriptions: Single copy: $7.99.
Canadian Subscriptions: Canada Post Agreement No. 40038201. Send change of address information to PO Box 881, Station Main, Markham, ON L3P 8M6. Canada BN 82564 2911
Periodicals Postage Paid at Des Moines, IA, and at additional offices.
Postmaster: Send change of address to *Woodsmith*, Box 37274, Boone, IA 50037-0274.

Printed in U.S.A.

WoodsmithCustomerService.com

ONLINE SUBSCRIBER SERVICES

- **VIEW** your account information
- **PAY** your bill
- **RENEW** your subscription
- **CHANGE** your mailing or e-mail address

CUSTOMER SERVICE Phone: 800-333-5075 weekdays

SUBSCRIPTIONS
Customer Service
P.O. Box 842
Des Moines, IA 50304-9961
subscriptions@aimmedia.com

EDITORIAL
Woodsmith Magazine
2143 Grand Avenue
Des Moines, IA 50312
woodsmith@aimmedia.com

ACTIVE INTEREST MEDIA

PRESIDENT & CEO **Andrew W. Clurman**
CHIEF FINANCIAL OFFICER & CHIEF OPERATING OFFICER **Michael Henry**
CHIEF INNOVATION OFFICER & GROUP PRESIDENT, ACTIVE LIVING GROUP **Jonathan Dorn**
VICE PRESIDENT, AUDIENCE DEVELOPMENT **Tom Masterson**
VICE PRESIDENT OF PEOPLE AND PLACES **JoAnn Thomas**
AIM BOARD CHAIR **Efrem Zimbalist III**

contents

No. 244 • Aug/Sept 2019

Projects

weekend project

Shadow Boxes 18

These shadow boxes contain a unique hidden feature. The front frames can be quickly removed to allow you to change out your display whenever you like.

designer project

Entry Door 24

Solid-wood construction and insulated glass are combined to create an entry door that is as strong as it is attractive. Plus, we'll give you some tips on installing it.

shop project

All-in-One Workstation 34

This workstation combines three major power tools into a single, mobile footprint. Its space-saving design makes it a great addition to any shop — large or small.

heirloom project

Infant Cradle 46

We've given this traditional project an updated look while maintaining all the charm of the original. Loose-tenon joinery simplifies the construction.

Departments

Reader Feedback 5

from our readers

Tips & Techniques 6

all about

Compasses & Dividers 10

great gear

What's New in Track Saws 14

woodworking technique

Vacuum Stabilizing 56

router workshop

Sliding Dovetail Joints 60

finishing room

Crackled Paint Finish 64

READER Feedback

Expensive Tools

Come on folks... $325 for a coping saw (*Woodsmith* No. 241, p. 14)! *Blue Spruce* please. RIDICULOUS! I'm severely disappointed! That's a power tool for most people!

Craig Nickles
via Twitter

Asst. Editor Logan Wittmer replies: *Indeed, the Blue Spruce saw is top of the line and far from cheap. However, the same thing can be said of any hobby. Some people spend money on cars, horses, or Harleys. I spend mine on high-end tools.*

A Long-Time Reader

I enjoyed reading your 40th Anniversary Sawdust note (*Woodsmith* No. 241, p. 2). I cannot remember when I first started subscribing to *Woodsmith*, but my first few issues were just two or three pages.

I tried to do four or five projects per year, but my wife kept reviewing your publications and saying, "I want you to build me one of those!" until I had lost count. I usually follow your plans, but often amend them slightly to fit a particular space in my house.

Since I'm almost 80 years old, I have limited my workshop time to "weekend projects" that require less calculations or intricate shaping.

Your expansion into video and digital media has been amazingly informative and always a source for new projects.

John D. Ammon
Burlington, Kentucky

Setup Gauge Looks Familiar

Echoing Mark Rhines' comment in reader feedback about the edge sander in issue No. 240, I see you've done the same thing with the setup gauge (*Woodsmith* No. 243, p. 42) which originally appeared in *ShopNotes* No. 5.

I agree with him that if you are going to rehash ideas, at least cite the old version and explain why you updated it.

I am a long time subscriber and I don't mind a re-visit to old projects/ideas provided there's a reason for it such as a better way or a new way of looking at it.

Dave Wilson
Burlington, Ontario

Editor Vincent Ancona replies: *In the case of both these projects, the originals were published over 20 years ago, in our sister publication. We felt it was worth revisiting these for the benefit of all those who may not have seen them when they originally appeared. In the future, we will cite the original source when using previouly published projects.*

More Useful Projects, Please

I have been a reader and subscriber since *Woodsmith* No. 19. In this time frame, I've built over 35 lasting pieces of furniture and keepsakes from *Woodsmith.* The arrival of every magazine is greatly anticipated, since I look forward to see which project I might want to build.

Lately, I have been a little disappointed in the projects that have been in the projects section. I can't think of anyone that I know who will build a CNC router. Please go back to projects that create enthusiasm in the wood shop.

Ray C. Weimer
Palmyra, Virginia

You may email comments to *Editor@Woodsmith.com*. Please include your first and last name, city, and state. Comments may be edited for length or clarity.

Woodsmith SHOP

Iowa Public Television Iptv.org — *Sponsoring Station*

POWERMATIC, Kreg, Old Masters Since 1953 — *Major Program Underwriters*

Titebond® — *Additional Funding*

▲ The rounded head on a modified bolt is the perfect pull to release the bolt and turn the lazy Susan.

Rotating Table Latch

A great way to save space in my shop is to combine smaller bench tools onto a rotating platform. I use a lazy Susan bearing and plywood to create my rotating tables. Holding the table in position while I work can be an issue however. The solution I came up with is the latch seen here.

SPRING-LOADED LOCK. The latch is a shop-made, spring-loaded lock. A corner spacer is made in two halves and holds a sliding bolt. Inbetween the corner spacer is a rear block that has a hole for a spring and cut off bolt (detail 'a' and 'c'). The sliding bolt presses against the spring and slides between the corner spacers. A top plate with a slot caps the whole thing. A rounded off bolt is epoxied into the sliding bolt to act as a thumb post.

To use it, you simply pull the post back, releasing the bolt from a notch in the lazy Susan. You can then rotate the lazy Susan and release the bolt. The bolt will automatically engage when you reach the next notch position in the platform, locking it in place.

Craig Turner
Lafayette, Lousiana

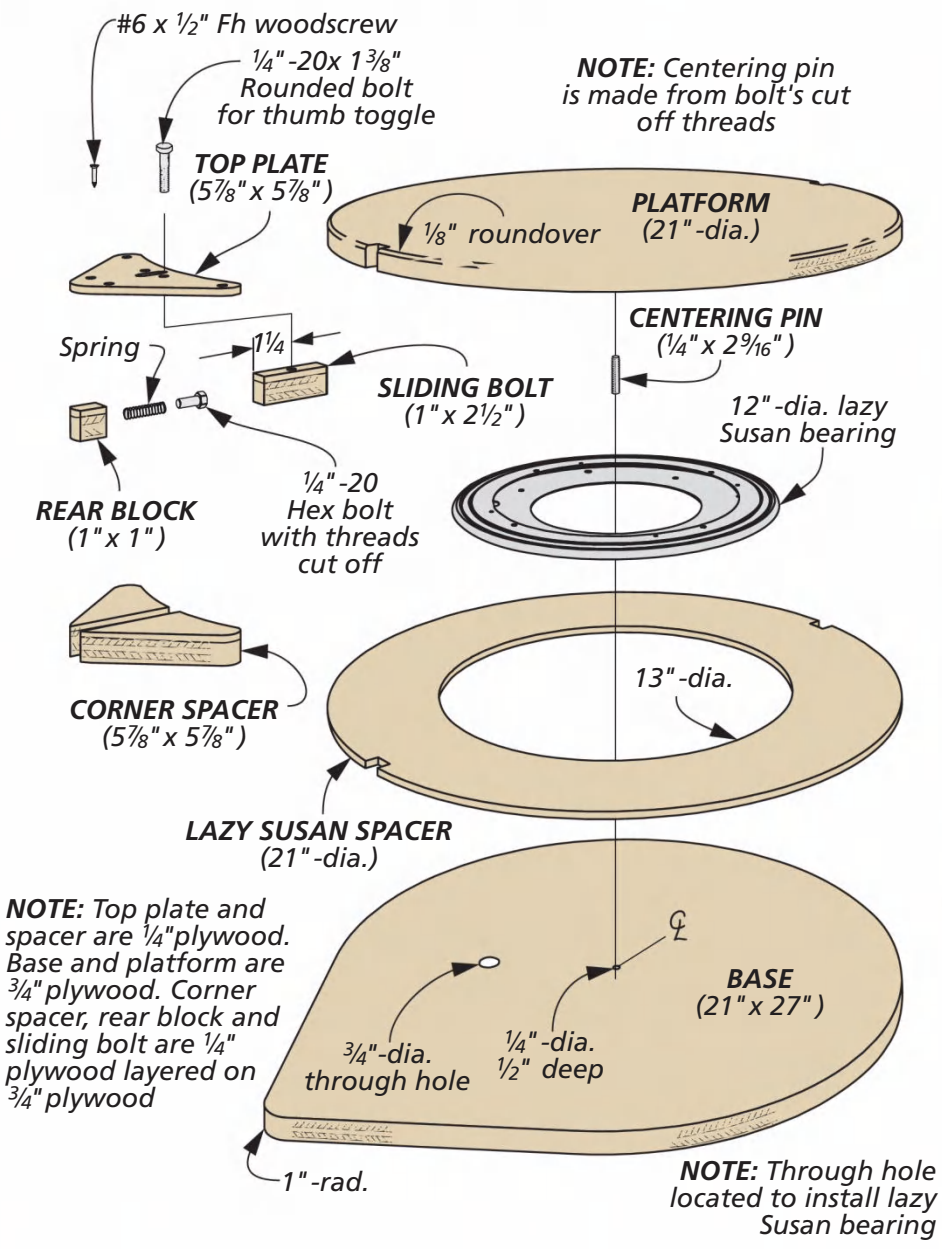

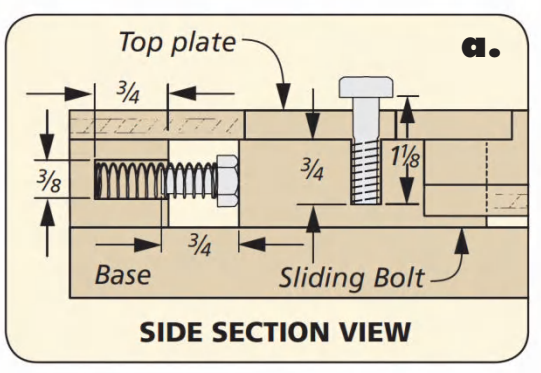

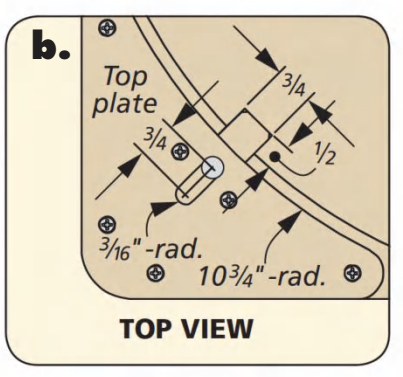

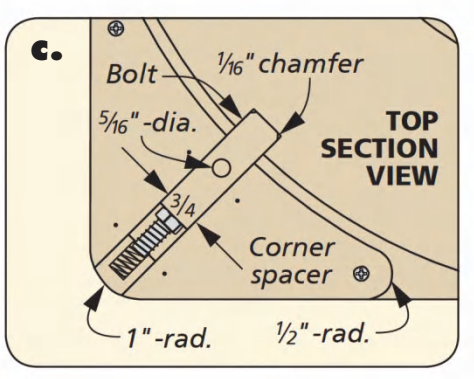

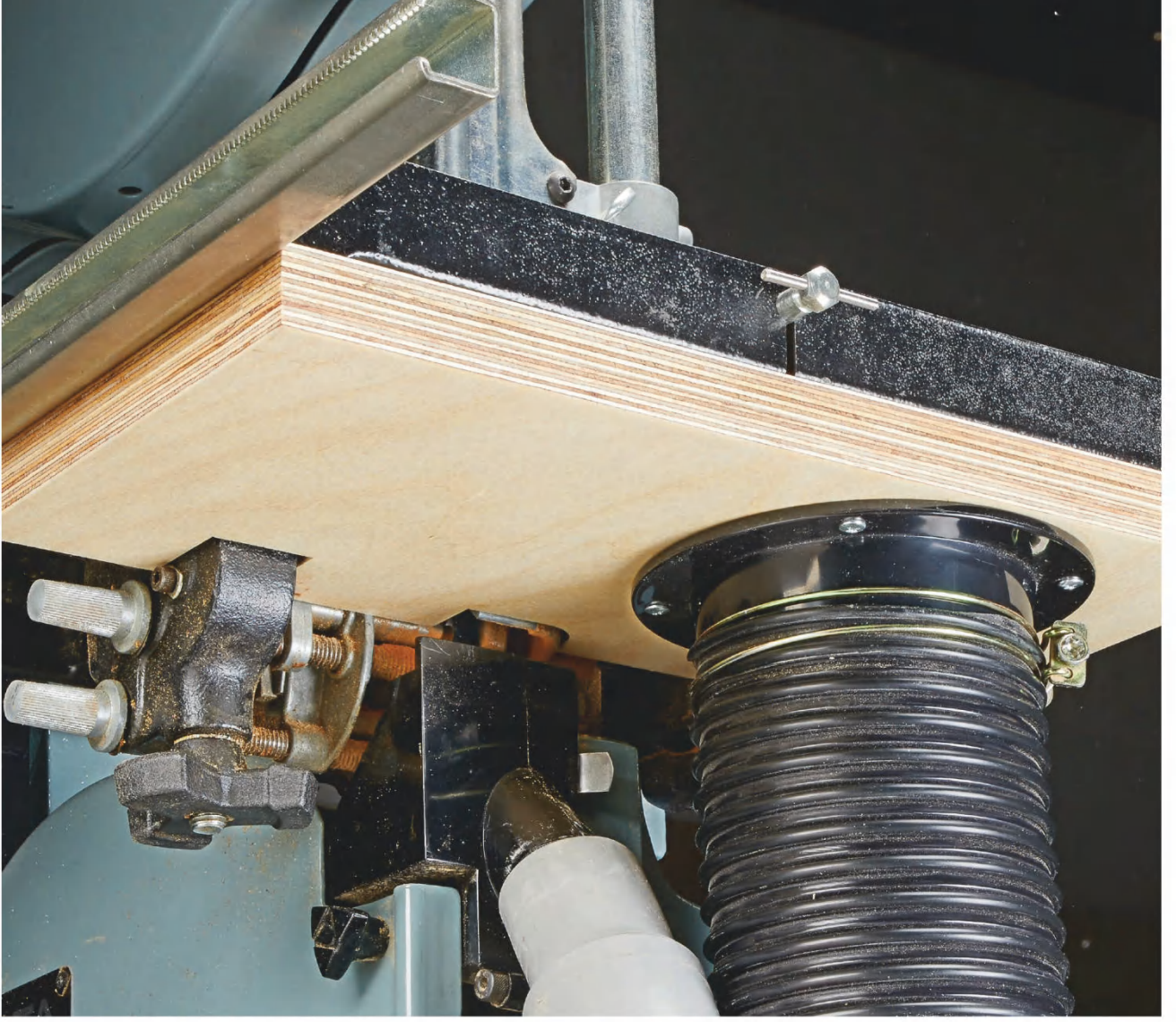

Band Saw Dust Collection

I love my band saw. What I don't love is the dust it makes. Even though it has a collection port, it didn't work well. So, I came up with the solution seen here.

My idea was to build a dust shroud that collects the dust from around the underside of the table. The shroud is made of plywood and shaped to fit around the saw trunuions. It has two layers. The first is a spacer layer to create room for dust collection. The second layer is the base and it has a dust collection fitting installed on it. With the shroud secured in place with a bead of silicone, there's a lot less dust.

Jim Reinhart
Bloomington, Indiana

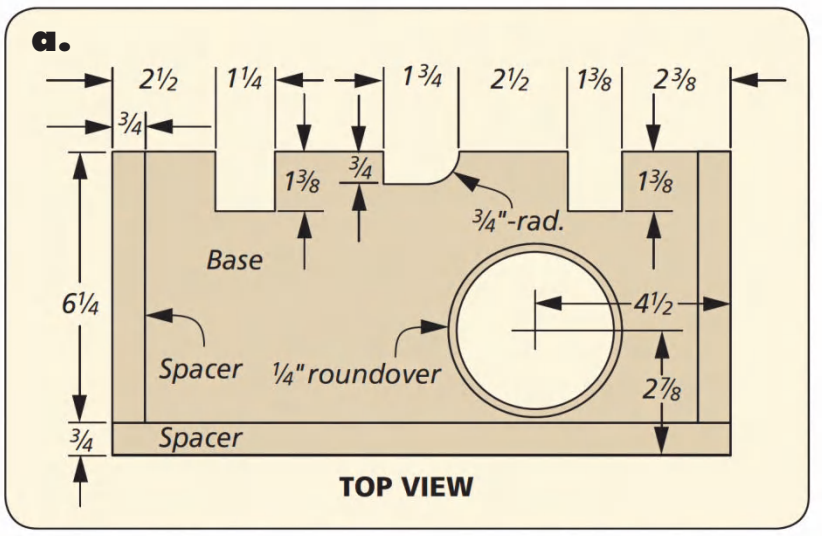

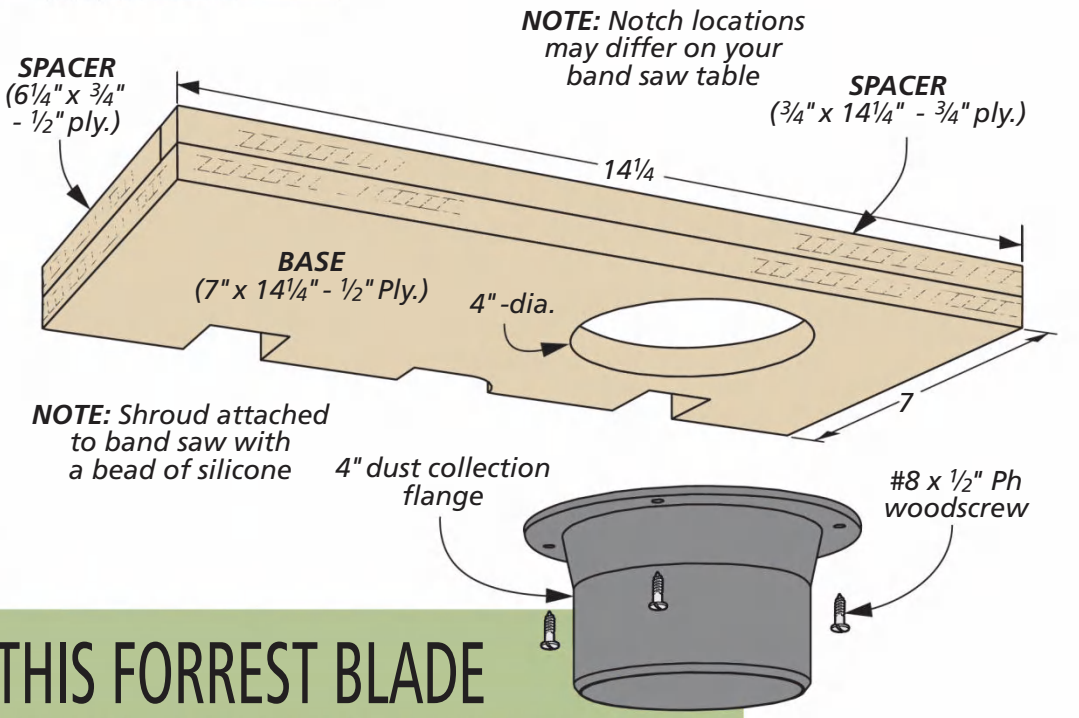

WIN THIS FORREST BLADE

GO ONLINE

If you have an original shop tip, we would like to hear from you and consider publishing your tip in *Woodsmith*. Jump online and go to:

SubmitWoodsmithTips.com

You'll be able to tell us all about your tip and upload your photos and drawings. You can also mail your tips to "Woodsmith Tips" at the editorial address shown on page 3. We will pay up to $200 if we publish your tip and one tip from each issue will be selected to win a *Forrest Woodworker II* saw blade.

THE WINNER!

Congratulations to Richard Rosen, the winner of this *Forrest Woodworker II*.

Illustrations: Becky Kralicek

Scissor Jack Stand for Precise Control

When working with long boards in my shop, I like to use outfeed support for extra control. One day, I decided to build a universal outfeed support for different machine setups.

JACK IT UP. This is the outfeed stand that I came up with. It uses an ordinary automotive scissor jack. After cutting off the metal top bracket, I was able to bolt on a plywood plate. On the plate there are four-way rollers to offer friction-free support. To mount the jack, I attached it to a plywood base so I could secure it to a cart. Because the jack has a lot of adjustment, I mounted it on a cart and fine-tune the height by raising or lowering it to match whatever machine I'm working at. The four-way rollers mean it doesn't need to be perfectly square to my machine to allow the workpiece to slide.

Richard Rosen
Denver, Colorado

QUICK TIPS

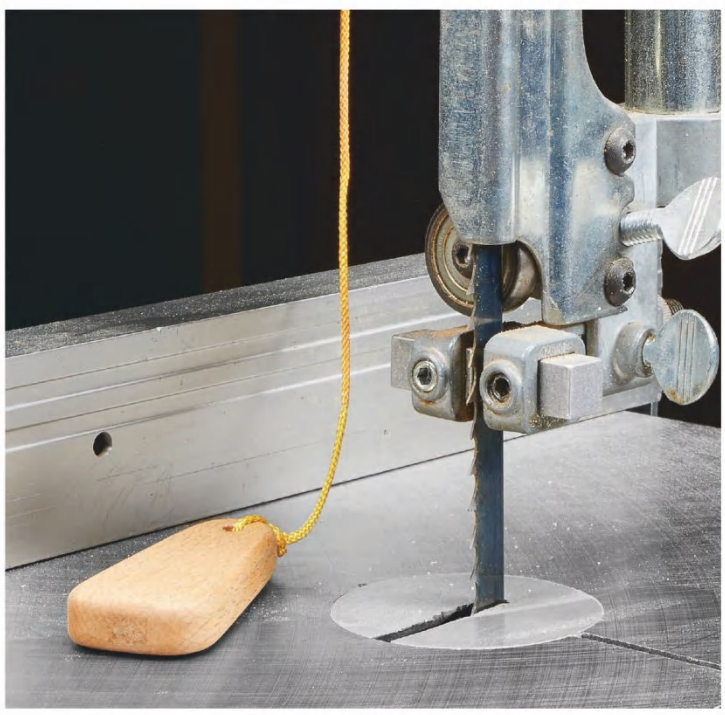

Blade Tension Reminder. *William Collett* of *Bettendorf, IA* attaches a block and string to his band saw blade tension arm. When he releases the tension, he puts the block on the table. This way, the next time he goes to use it, he is reminded to re-tension the blade.

Using Your Noodle. *Larry Renalds* of *Ankeny, IA* found that when he was moving heavy sheets of plywood around in his shop, he tended to damage the bottom edge. Annoyed by this problem, Larry found that a pool noodle slit along the length was the perfect edge protector.

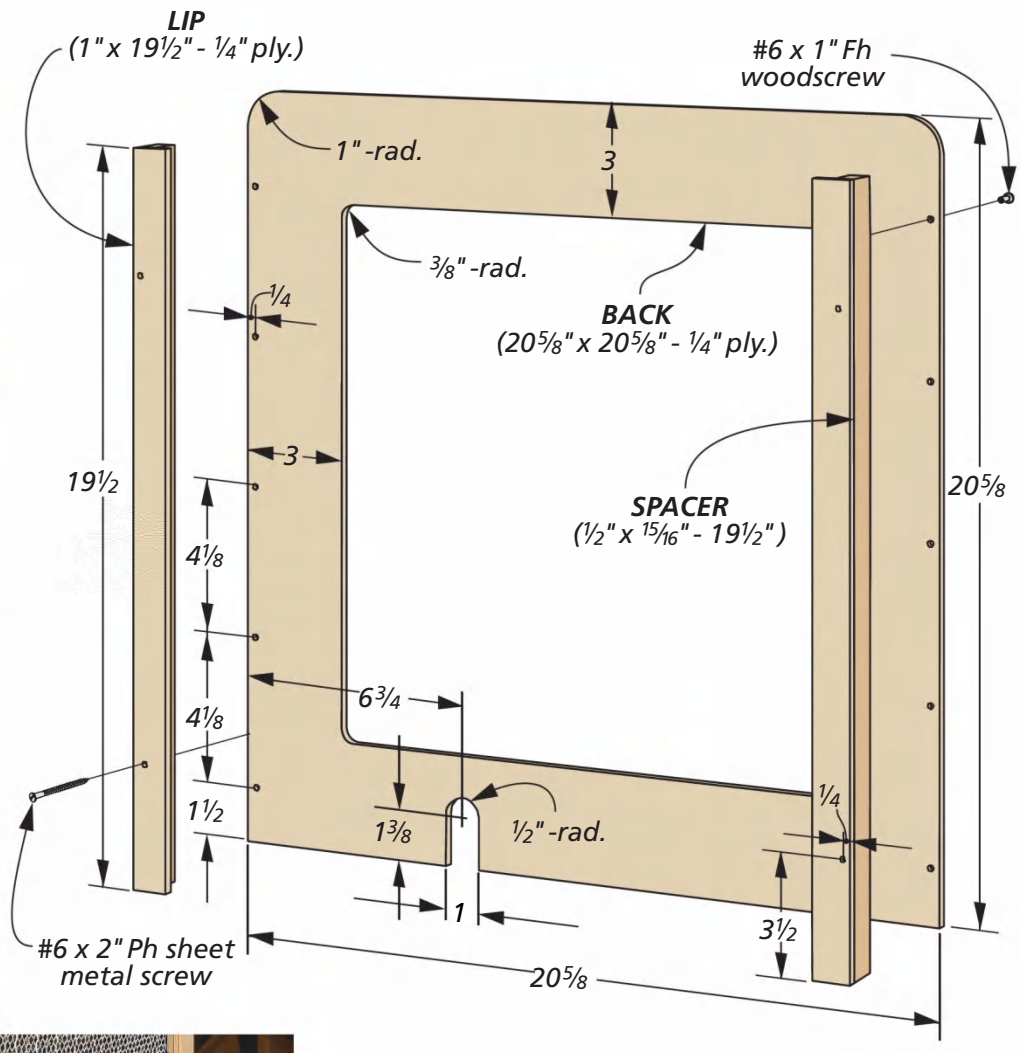

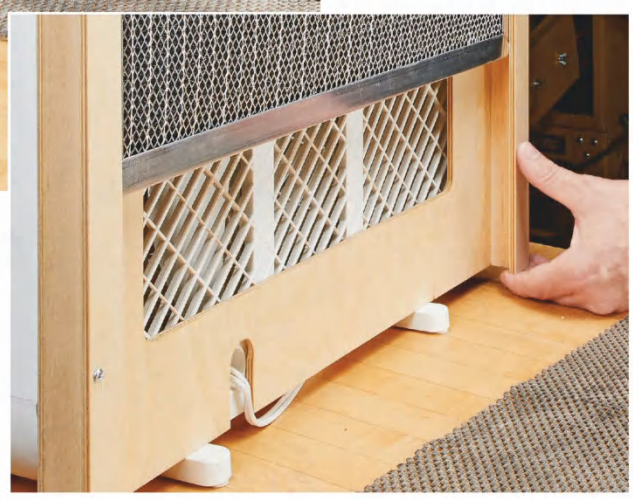

The notch is cut for the power cord, but can be adjusted to fit your fan.

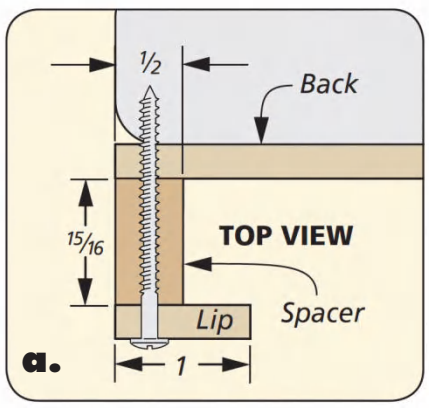

Benchtop Dust Filter

In my shop, I take dust collection seriously. I like to collect as much dust as I can. Using a fan with a filter is a trick that's been floating around for a while. However, it was always a pain to attach the filter to the fan. So, I built this bracket to hold an electrostatic, reusable filter. The filter can quickly be taken out and washed, without the need to unscrew it or peel off double-sided tape.

The bracket is built out of plywood, and the back is sized to match the fan. The spacers along the edge are made out of hardwood with a plywood lip. I notched the bottom of the back to slip over the power cord. The entire filter holder is held to the fan with sheet metal screws, screwed into the frame. Now, it's much easier to keep the air in my shop clean.

Dennis Volz
Denver Colorado

DIGITAL WOODSMITH

RECEIVE FREE ETIPS BY EMAIL

Now you can have the best time-saving secrets, solutions, and techniques sent directly to your email inbox. Simply go to:

Woodsmith.com
and click on,

Woodsmith eTips

You'll receive one of our favorite tips by email each and every week.

Compasses, Dividers & Trammels

I think the seed for my woodworking journey was planted in grade school. When we had to get supplies at the start of the school year, one of my favorites was a simple compass.

It was just a pair of stamped metal legs connected by a pivot point. One leg held a sharp metal point and the other held a pencil. Friction held the legs in position (sort of) to adjust the compass for drawing an arc or circle. And I drew a lot of them!

That basic compass continues to exist because kids still need to draw arcs and circles. But it probably looks more like the one you see at the upper left on the next page. It has a very small tip that's safer to use and it's made mostly of plastic. Here again, friction holds the setting.

I upgraded my compass years ago to one like you see at the far right. Its all-metal design is more durable and the legs are connected by a threaded rod for precise adjustment. Instead of a pencil, one of the legs holds a piece of drafting lead.

Regardless of the style of compass you may have, you'll find a couple of key uses to the right for getting the best use out of it.

Written by: Bryan Nelson

HANDY USES

At its most basic, a compass can be used to lay out any portion of an arc. This basic ability expands into a wide range of uses — from dividing lines and angles to creating geometric shapes, such as hexagons and octagons.

While you may run across the need to use your compass for these things at some point, there are a couple things I've found I use my compass for on a fairly regular basis.

ROUNDING CORNERS. The first is to ease the corners of a workpiece, like you see in the main photo on the previous page. It's something that shows up in many woodworking projects. For a consistent radius, you need an accurate layout to guide you. That's true whether you round a corner with a small radius by hand using a rasp and sanding block, or trim the waste away on a larger radius with a jig saw.

The key to consistency is accurately locating the pivot point of the compass. Instead of grabbing a rule and doing a lot of measuring, it's simpler to set the compass to the desired radius and use the compass to find your pivot point. You can see how this works in the photo below.

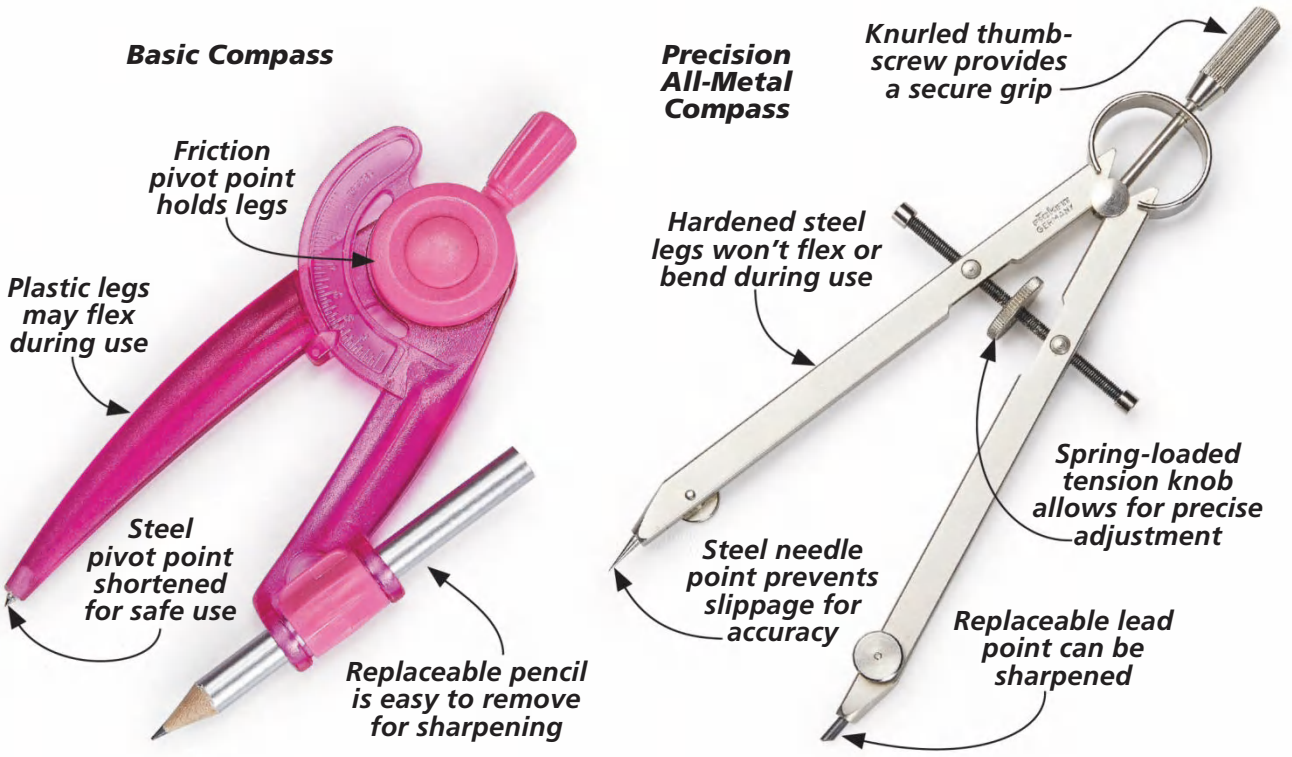

▲ The type and quality of compasses varies widely. The simple plastic model at left is something you'd find in any grade schooler's desk. For precision and longevity, the satin steel version can't be beat.

It's just a matter of using the pivot point as a guide to draw a line parallel to each edge near the corner. Where they cross is the centerpoint you need to draw an accurate radius (main photo).

SCRIBING. The other key task I use my compass for is scribing. I've needed to install cabinets and countertops many times and it's not unusual to have a gap between the back edge of the cabinet or countertop due to irregularities in the wall surface. For a custom fit, you can shape the back edge of the cabinet or countertop to match the wall.

The key is knowing where to remove material, so things mate perfectly. In the drawing below, you can see how to use a compass to transfer the shape of the wall to a cabinet or countertop.

Once the profile has been transferred, you're ready to remove the waste right up to the line by sanding or trimming. Doing this matches the two so when you install the cabinet or countertop, any gap disappears.

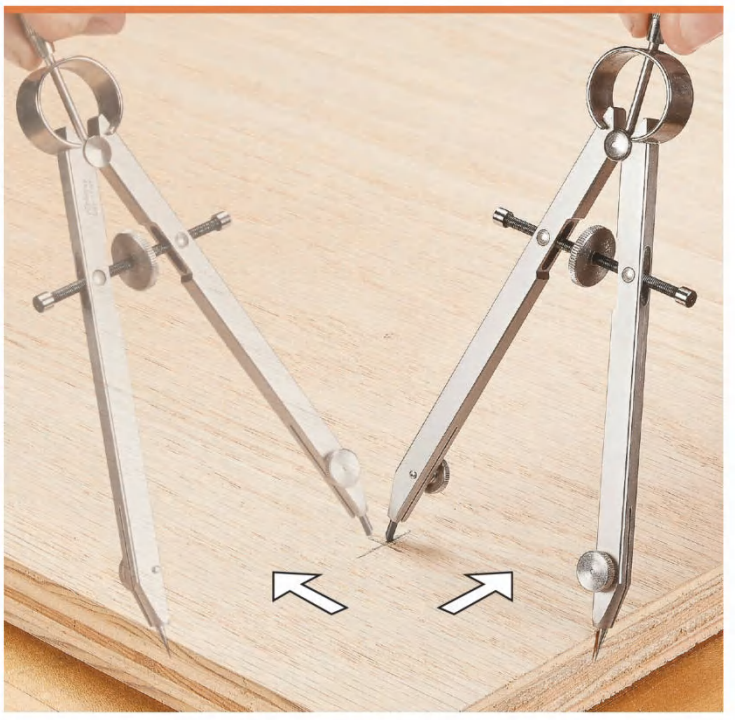

▲ To locate the centerpoint for drawing an arc, simply draw a line parallel to each edge using the steel tip as a guide. Where they cross is your pivot point.

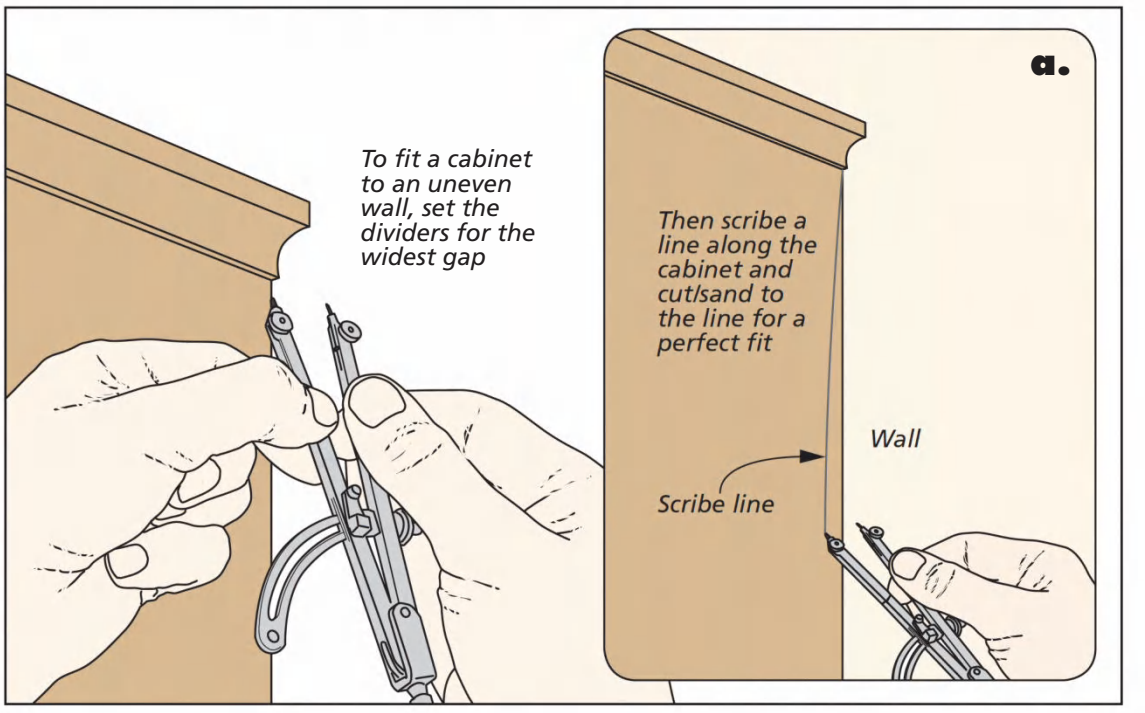

A Perfect Fit. To fit a cabinet or countertop perfectly to a wall, set the compass to match the widest gap. Then scribe, or draw, a matching line on the cabinet. Finally, trim or sand to the line for a profile that matches exactly.

Illustrations: Bob Zimmerman

DIVIDERS

While a compass can handle a lot of basic layout tasks in most shops, there's another tool you'll want to consider when it comes to layouts. It's a close cousin to the compass known as a divider.

As you can see in the photo at right, a divider looks almost identical to a compass. It has a pair of legs connected by a pivot point. But instead of a pencil or lead as part of one of the legs, a divider has an identical leg with the same sharpened metal tip.

SHOP-MADE. The photo at right shows two types of dividers — one shop-made and one commercial. On the shop-made version, the legs are held together by a peened rod and spring washer. Friction alone holds the legs in place during use.

The commercially made dividers feature a knurled knob that not only allows for precise adjustment of the legs, but also locks them in place so they can't be inadvertently knocked out of position.

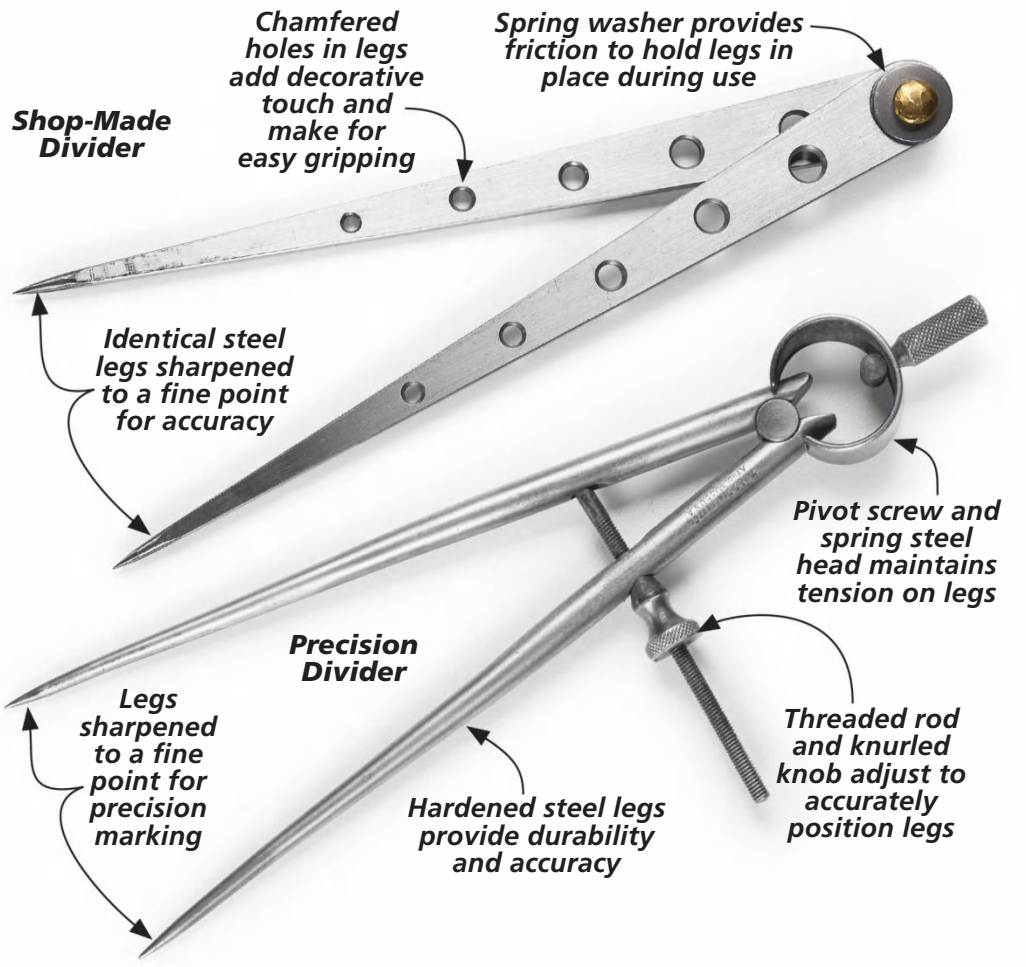

▲ The divider shown at top consists of a pair of shop-made steel legs connnected via a friction pivot point. The lower model is connected via a spring steel head but adjusts via a threaded rod for precise work.

BASIC DIVIDER TASKS

A divider can be used just like a compass to lay out arcs and circles. Instead of a pencil mark on your workpiece, the steel tip scores the layout right into the surface of the material. In most cases, this isn't an issue. But working with the grain can be a challenge as the tip may want to follow the grain. And cross grain marks may tear the fibers of the wood. But I haven't found this to be an issue on the work I do.

SHELF PIN LAYOUT. One task where I find myself reaching for a divider is laying out small runs of shelf pin holes in a project. I find it quicker and more accurate than using a rule and pencil.

You'll still need a rule, but only to set the spacing of the divider legs, like you see in the lower left photo below. Once the divider is set one tip in place at the start of the line of holes. Then press both tips slightly into the workpiece (photo, lower right).

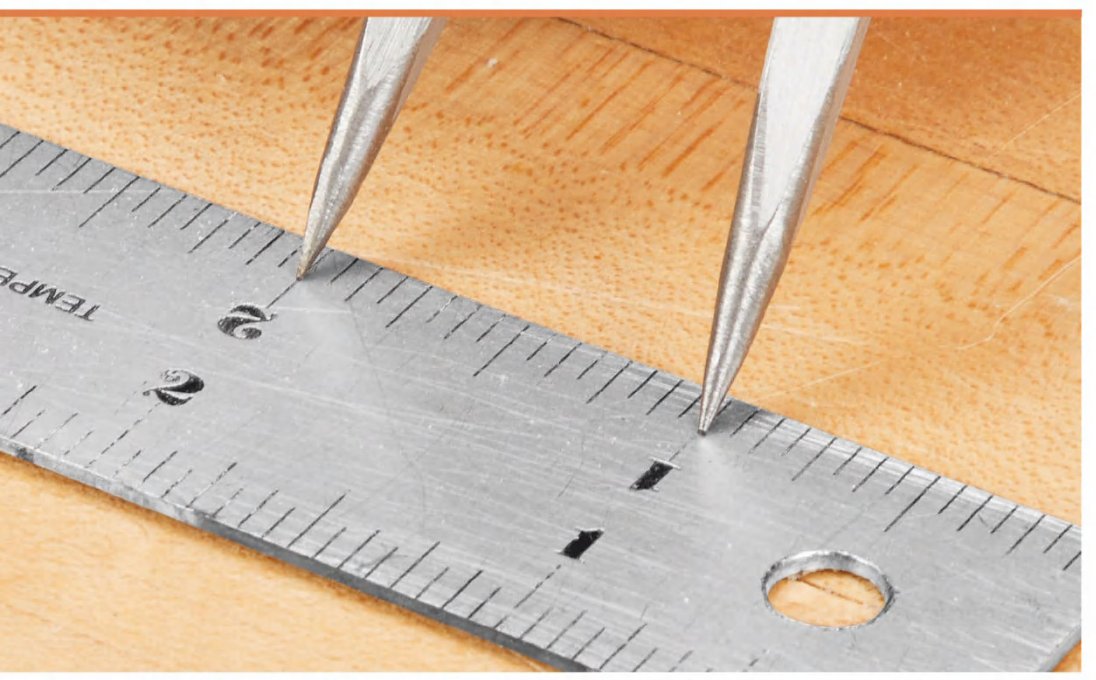

▲ As simple as they are, a divider is a precison layout tool. Setting it accurately is easy since the fine points at the end of each leg fit perfectly into the etched lines on a steel rule.

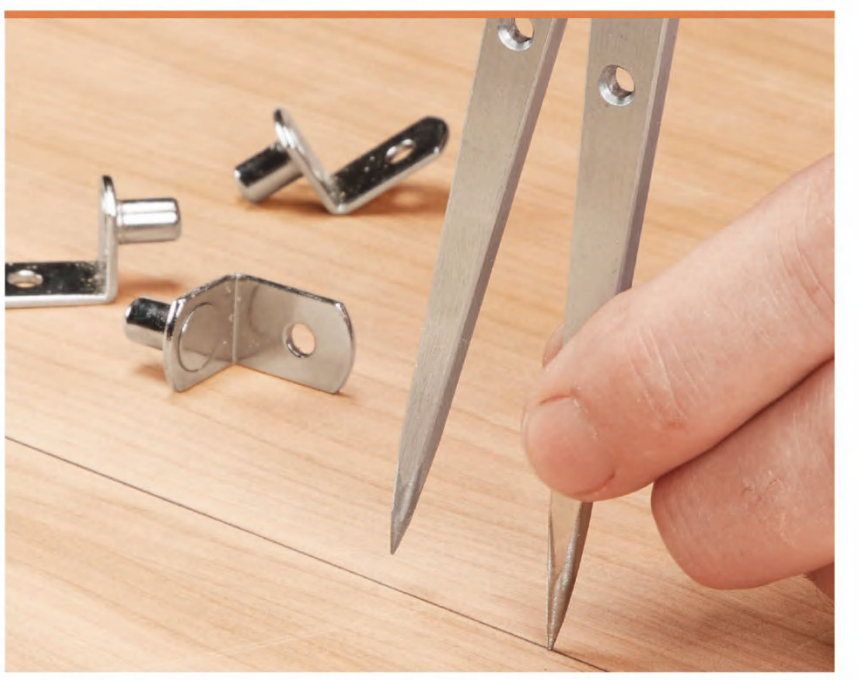

▲ Once the divider is set, you can accurately lay out a set of shelf pin holes. Press the tip into the starting location and step off the following holes one by one.

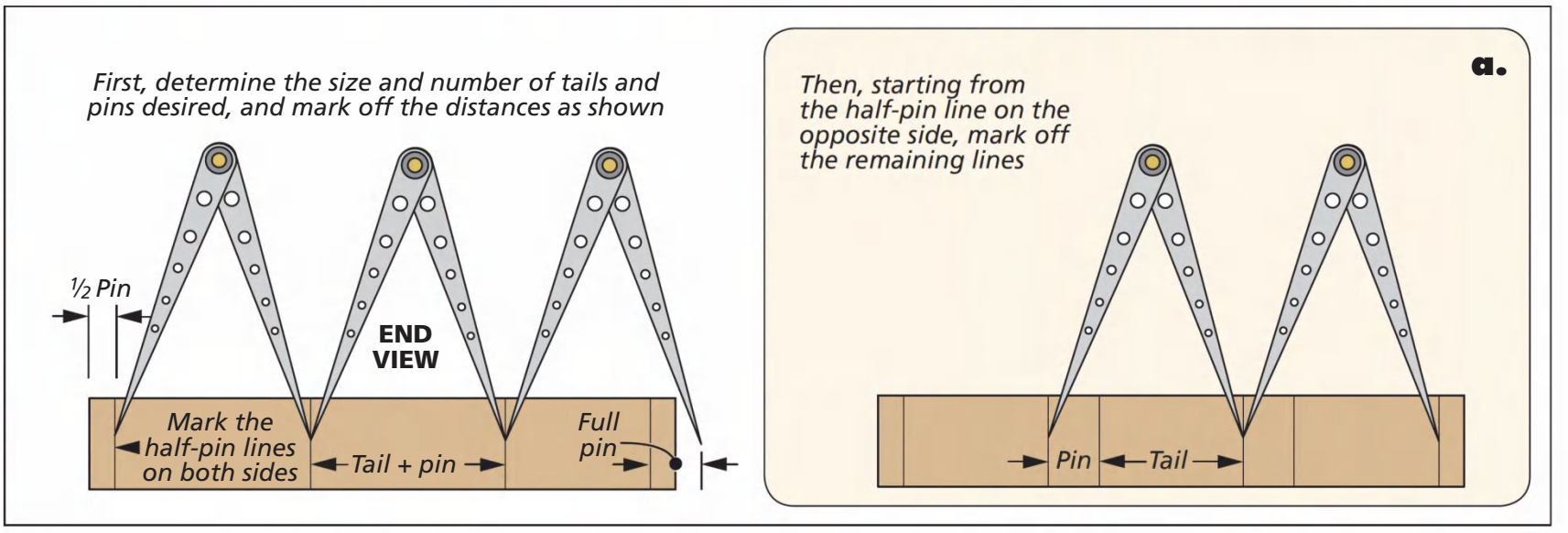

Dovetail Layout. To start your layout, first decide on the size of the pin you want. Then mark half-pin layout lines at each edge of the workpiece. After adjusting the divider, step off one set of the full pin layout lines, as in the left drawing. To set the other half of each pin layout, repeat the process from the opposite end (detail a).

To locate the third (and subsequent holes), pivot the divider on one of the legs to "step" it to the next hole. You can repeat this process for any remaining layout holes in the row. The nice thing about using a divider is the holes pressed into the surface provide a great starting point for the tip of a drill bit.

DEAD-ON DOVETAILS. Another layout task where a divider excels is laying out dovetails. This method takes specific measurements out of the equation and will work for any width workpiece and number of dovetails.

You can see how the process works in the two drawings above. What I like is how easy it is to dial the spacing in. You can lightly press the points into the end of the workpiece to see how things look as you go along.

If you need to tweak the layout, simply adjust the divider a bit and repeat the process. Using this trial-and-error process, I can end up with spacing I like in just a few minutes without ever having to measure anything.

One last thing. Compasses and dividers take care of most of the tasks in my shop. When it comes to larger layout work, they come up a bit short due to their limited size. If have a need for laying out large arcs and circles, check out the box below.

Dividers have many other uses that you can find described online, so be sure to check them out. W

TRAMMEL POINTS & BEAM COMPASSES

While you can buy bigger compasses and dividers for large layout work, they can begin to get cumbersome. So when large radii are needed, it's better to turn to a beam compass, like the one you see in the photo at right.

The simplest way to create a beam compass is to buy a set of trammel points. Like anything else, the points come in a wide range of styles. The pair of trammel points shown at right clamp to a wood beam. The steel points can be used for layout work or one of them can be swapped out for a pencil to draw directly on the workpiece (main photo at right).

A beam compass is a great way to create a large radius. Making one any size you need simply requires a long wood "beam" (photo above) and a pair of trammel points (left).

What's New in Track Saws

Track saws have risen in popularity over the last several years, and for good reason. They're portable, accurate, and, for some cutting tasks, they hold an advantage over a table saw.

I had the opportunity to try out two track saw systems at opposite ends of the cost and feature spectrums. The first is the *Kreg Adaptive Cutting System*. It's a complete package that includes a handy project table with accessories. The other saw I looked at was the *MLCS Track Saw System.* You can find out more about it at the bottom of page 17.

Written by: Randy Maxey

The *Kreg Adaptive Cutting System* was designed to be a complete, portable cutting station. The key players of the system are the plunge saw and guide track.

SAW & GUIDE TRACK

Even though it's included in the *Adaptive Cutting System*, the plunge saw and guide track combo is worth a look on its own. This combo is ideal for breaking down full sheets of plywood or MDF (lower left photo). The resulting cut edge is straight and smooth, ready for assembly.

When purchased as a kit, the saw/track combo comes with a 62" aluminum track. This allows you to crosscut 48"-wide sheet goods. You can purchase additional track sections to combine for longer lengths.

Additional accessories, like the rip guides shown on the lower right, make rip cuts easy and accurate. Other add-ons are available from *Kreg* to aid in cutting wide pieces to width.

SAW FEATURES. The *Kreg* plunge saw is the heart of the system and offers many features that contribute to its precision and safety, as shown in the upper right photos.

The Kreg Adaptive Cutting System variable-speed plunge saw is engineered to make smooth, accurate cuts in a variety of materials. Built-in safety features means you can use the saw with confidence.

SAFETY. Unlike a circular saw, the plunge saw starts with the blade above the workpiece. The blade is never exposed during the cut. After plunging downward, you can make a cut with ease. A riving knife follows in the saw kerf to prevent kickback.

A knob on the base controls an anti-kickback mechanism. When engaged, the saw moves freely forward. But when the saw is forced or pulled back along the track, a spring-loaded lever prevents backward movement.

PRECISION. Making precise cuts with the plunge saw is aided by tracking controllers. They eliminate side-to-side play as the saw rides on the track. Set screws on the saw's base adjust the squareness of the baseplate to the blade and ensure the blade tracks parallel to the track.

CLEAN CUTS. The saw features a splinter guard at the leading edge of the blade. This, in combination with the zero-clearance strip on the track, prevents chip-out on both sides of the blade.

The plunge saw and guide track combo provides a handy, portable solution for making straight, precise cuts. Connect two sections of guide track to rip full sheets of plywood to width.

Accessories such as these rip guides make it easy to rip stock. Scales on the aluminum bars underneath set the desired width of cut. The bars act as stops.

The *Kreg Adaptive Cutting System (ACS) Master Kit* includes all of the items shown at right. What makes the system really useful is the project table and accessories that go along with it. (Everything in the *Master Kit* is also available for purchase separately.)

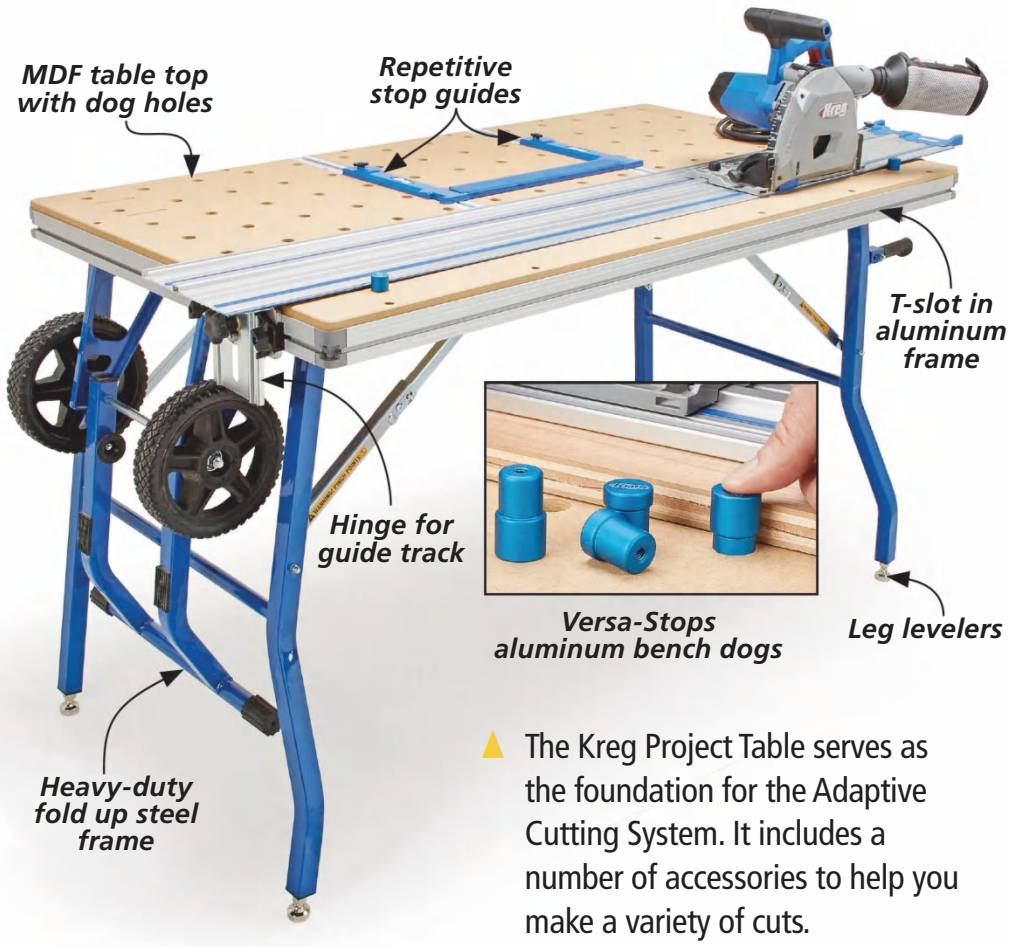

The Kreg Project Table serves as the foundation for the Adaptive Cutting System. It includes a number of accessories to help you make a variety of cuts.

PROJECT TABLE

The foundation of the system is the project table. It's a compact, portable workbench on heavy-duty folding legs. When it's set up for work, it creates a rock-solid worksurface. At the end of the day, it folds up into a compact package on wheels for easy storage and transport, as shown in the photo at left.

The project table folds up into a portable, compact package.

HINGED GUIDE TRACK. Making cuts on the project table is a precise operation thanks to the hinged guide track. A pair of hinges allow the track to be elevated to slip the workpiece underneath. Then you simply drop the track onto the workpiece. Anti-slip strips on the track hold the workpiece in place.

BENCH DOGS. You'll notice that the top of the project table is drilled with holes for bench dogs. These holes are parallel with the track, and allow the dogs (*Kreg* calls them *Versa-Stops*) to be an accurate reference point. *Kreg* includes a pair of tall *Versa-Stops* and a pair of short ones, as you can see in the inset photo above.

The *Versa-Stops* are used for positioning a workpiece for ripping, 45° cuts, and crosscuts (upper left photo on next page). Use them in combination with other accessories to position the workpiece for an accurate cut.

T-TRACKS. Along with the dog holes, a pair of T-tracks recessed into the top accept a variety of additional accessories. Each track features a pair of scales to accurately set up cuts.

The frame of the tabletop is made from a heavy-duty aluminum extrusion with a single T-slot. You install the hinges for the guide track and other accessories into this slot.

ADJUSTABLE STOPS. The table comes with a pair of adjustable *Repetitive Stops* that fit into the T-track in the tabletop (lower left photo). These are great for

Repetitive Stops slide into the T-tracks on the project table. Built-in scales make it easy to set up the desired length or width of cut.

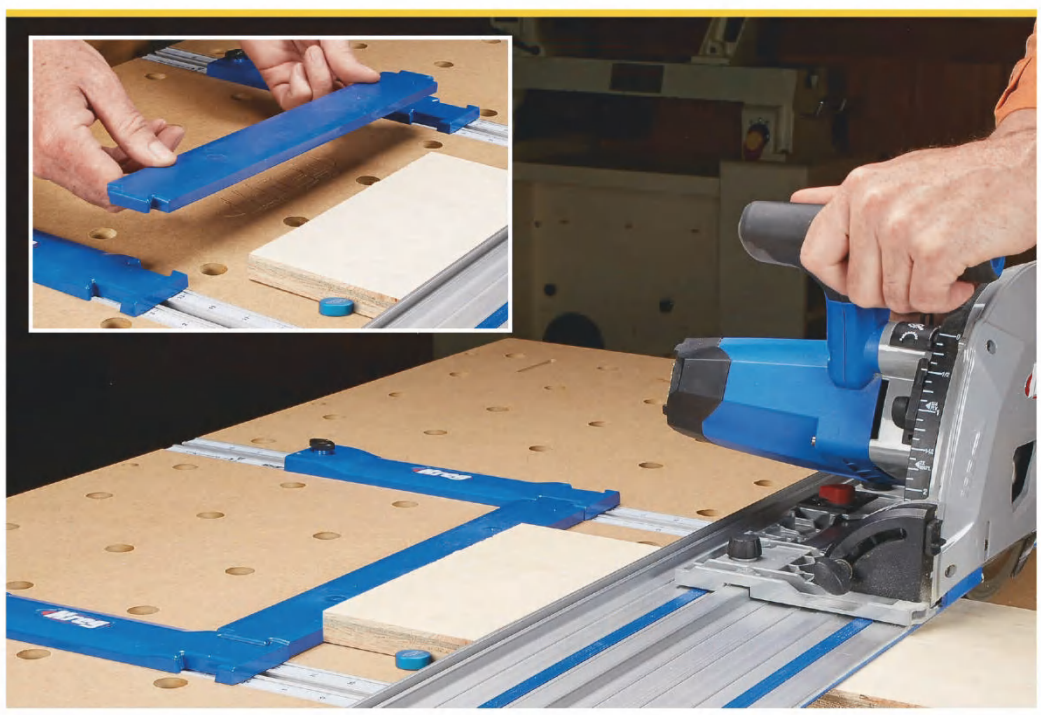

The Joining Bar connects the repetitive stops to create a wider bearing surface to register the workpiece before making the cut. It's especially useful when making crosscuts on narrow workpieces.

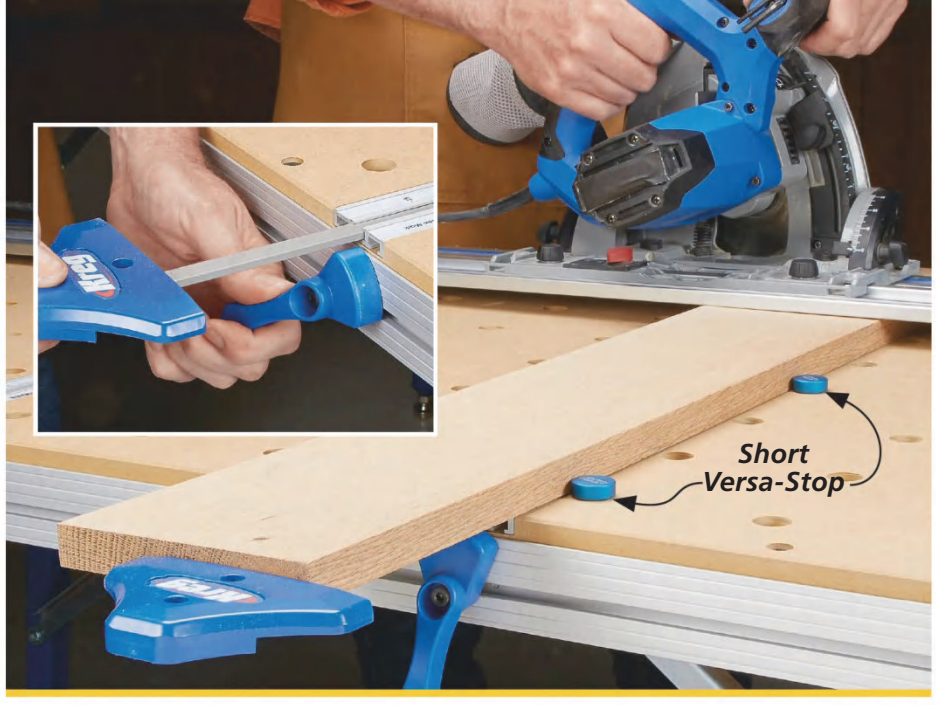

Use the Extension Stop for making repetetive cuts up to 48". The long bar slides into the project table's T-track and is adjusted using the scales adjacent to the T-track. The stop locks in place with a cam.

The Miter Guide acts as a large protractor for making angled cuts. The base of the miter guide locks into one of the T-tracks. Adjust the fence to the desired angle and make the cut.

making multiple rip cuts. Measuring scales adjacent to the T-slots make it easy for you to set stops for the width of cut.

To crosscut narrow workpieces to the same length, a *Joining Bar* connects the stops to create a longer bearing surface, as shown in the lower right photo on the previous page. I found it best to use the bar along with a pair of *Versa-Stops* to register and support the workpiece for making 90° cuts.

LONG & WIDE CUTS. To make cuts up to 48", the *Extension Stop* comes into play (left photo above). It consists of a long bar that slides into one of the T-tracks. A cam installed on the edge of the table locks it in place. You register the workpiece against the flat edge of the head of the *Extension Stop* and *Versa-Stops* before making the cut.

ANGLED CUTS. To cut 45° miters on the project table, there are a couple ways to do this. The easiest is to use a pair of *Versa-Stops* installed diagonally from each other in the tabletop. Then you can butt the workpiece against the dogs to make the cut.

The other way to make angled cuts is to use the *Miter Guide.* It's a protractor head that installs in one of the T-tracks, as shown in the upper right photo. Set the desired angle of the guide, register the workpiece against the fence, and make the cut.

FIRST IMPRESSIONS. After spending some time assembling all of the components of the *Adaptive Cutting System*, I put it through its paces. What impressed me the most was the accuracy of the cuts. Square crosscuts and rip cuts were dead-on, every time.

The quality of the cut edges on hardwood and plywood was impressive. I could go directly from cutting to glue-up.

The *Project Table* alone deserves a spot in the shop as a versatile worksurface. The complete system, however, is ideal for making precise cuts every time. W

BUDGET TRACK SAW

If you're looking for an inexpensive saw and track combo for breaking down sheet goods, the Track Saw System from MLCS is one option (see Sources on page 66). It features a small trim saw with an auxiliary handle that makes the saw well-balanced and easy to use.

The system comes with 110" of aluminum track in six sections with connectors. The edge of the saw base has a lip that engages a slot on the edge of the track.

The saw comes with a 60-tooth high-speed steel blade for plywood and a 24-tooth carbide blade. For portability and ease of use, the *MLCS Track Saw System* is worth a look.

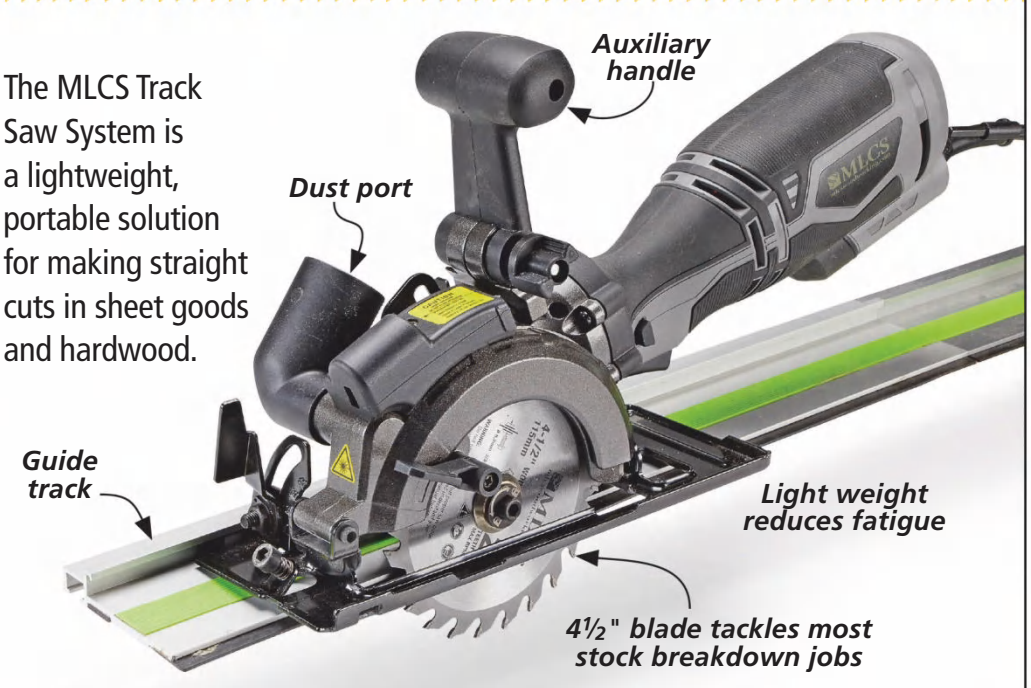

The MLCS Track Saw System is a lightweight, portable solution for making straight cuts in sheet goods and hardwood.

Written by: Vincent Ancona; Project Design: Dillon Baker

Shadow Boxes

Featuring custom frames and a decorative painted finish, these attractive boxes are a great way to showcase your prized collections.

There's something about the three-dimensional aspect of shadow boxes that I've always found appealing. Unlike a painting or print, the curated items in a shadow box have depth and dimension that somehow evokes the feeling of looking at artifacts behind the glass of a museum case.

But the shadow boxes shown here are likely to attract as much attention as the items they display. Each one features a unique, attractive frame made from built-up moldings. The frames are easily removed from the shadow boxes without taking them off the wall, making it easy to change out your display whenever the mood strikes you. And to top it off, a crackled paint finish gives these shadow boxes a distinctive look.

Traditionally, shadow boxes were used by retired servicemen to store and display their medals, insignia, and regimental colors. Today of course, shadow boxes are used to display all sorts of items. And because of this, each box in this trio is a different size. This gives you a little more versatility when it comes to choosing the right size for the items you wish to display. Or if you wish, it's a simple matter to alter the dimensions of the individual boxes to suit your needs.

A crackled paint finish gives the shadow boxes an antique appearance. Read how to create this finish on page 64.

Illustrations: Becky Kralicek

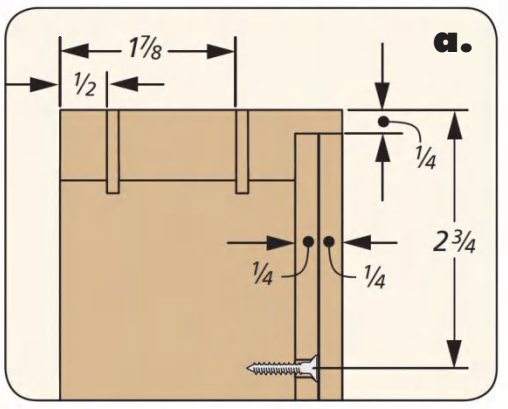

Start with a CASE

As I previously mentioned, there are three sizes of shadow boxes in this set. The basic construction is the same for all three. The only differences are the overall length and width and the profiles used on the frames for each box.

The drawings here (and throughout the article) show the smallest of the three shadow boxes. For the dimensions of the medium and large shadow boxes, refer to the drawings on page 23.

Each shadow box is comprised of two basic assemblies — a case that holds the items being displayed and a detachable frame that contains a piece of acrylic. I started by building the cases.

CASES. As you can see, the case is simply an open box with mitered corners. A plywood back is set into a rabbeted opening in the back of the case.

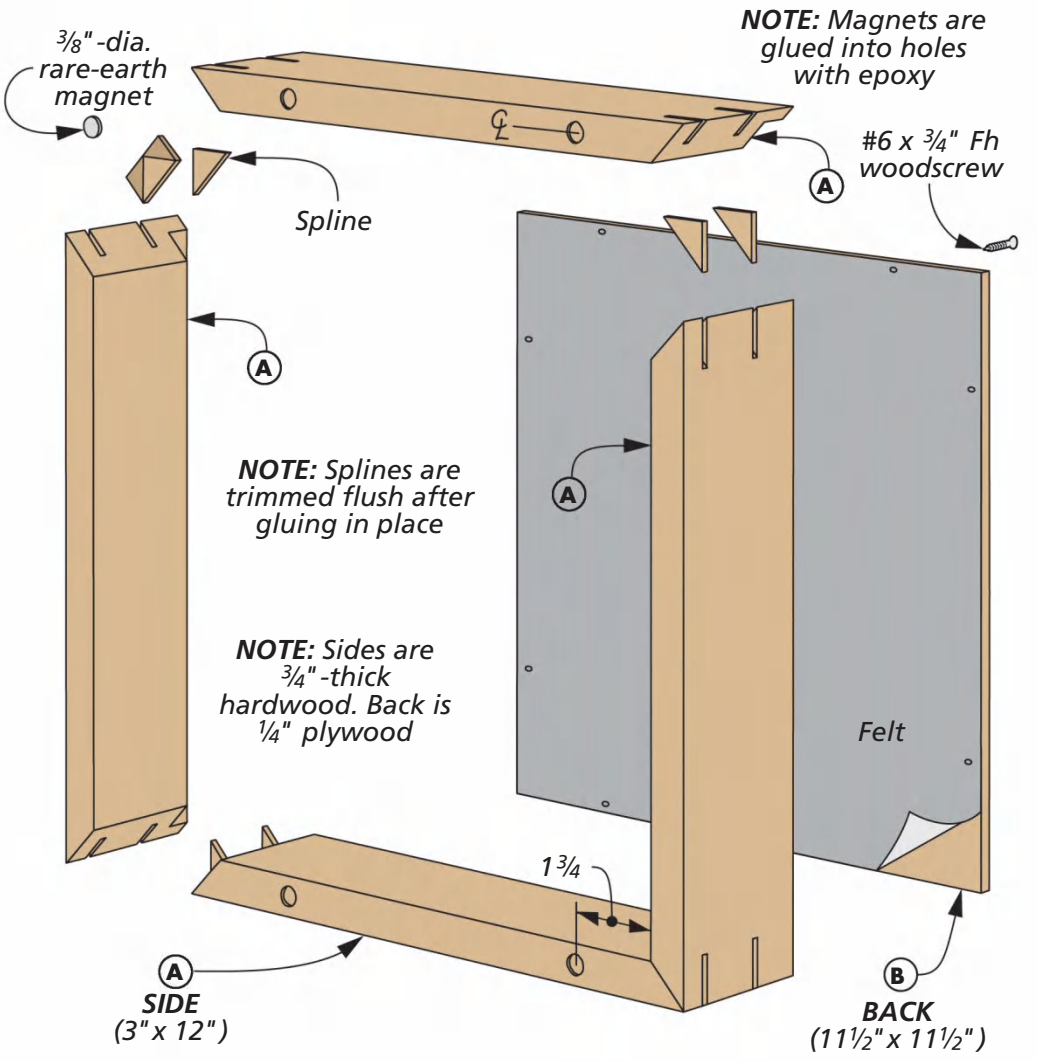

The depth of the cases is the same for all three shadow boxes. So if you're making the set, start by ripping enough stock for all three cases to finished width (3").

Next, using a dado blade, I cut a rabbet along one edge of all the parts for the cases. This rabbet will hold the back panel. With this done, you can miter the individual case pieces to their finished lengths.

ASSEMBLY. I glued up the cases using band clamps. There's not much to this, but you want to make sure that the miters are tight, the corners are square, and there's no twist to the assembly.

SPLINES. Miter joints aren't typically known for their strength. So to help reinforce the miters, I decided to add some splines. To do this, I made a simple cradle jig to hold each case as I

SPLINED MITER JIG

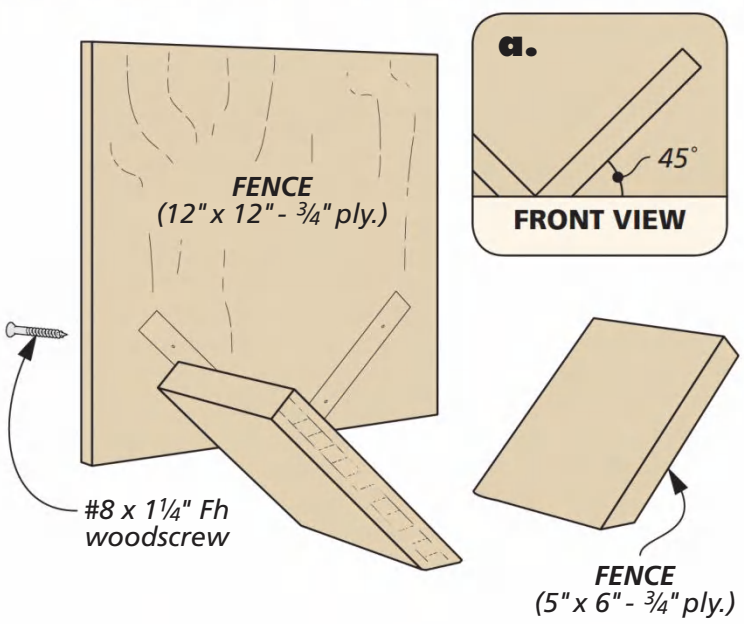

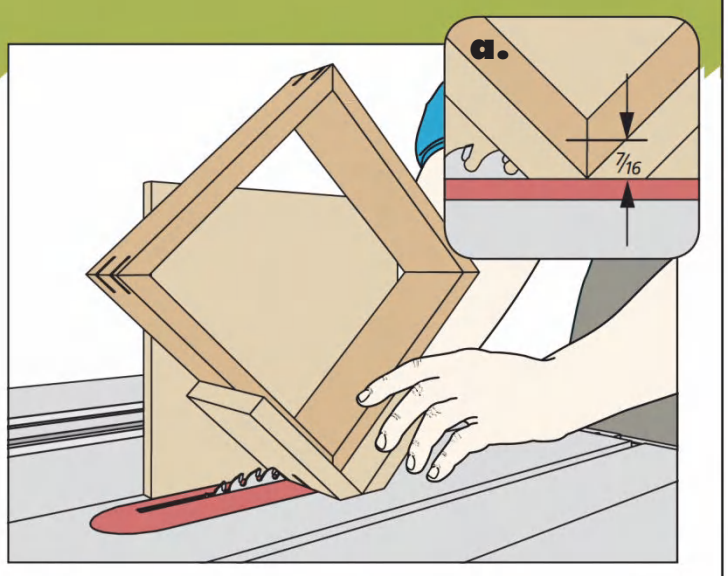

Kerfs for Splines. To use the jig, set the table saw rip fence to locate the kerfs at the desired position on the case. The case rests in the cradle of the jig while making the cut.

cut kerfs through the corners for the splines. You can see the jig I used in the box at the bottom of the previous page.

Each corner of the case receives a pair of kerfs. The spacing for these kerfs is shown in detail 'a' on the previous page. After cutting the first kerf on all four corners of the case, I reset the rip fence to cut the second kerf.

SPLINES. The splines are made from ⅛"-thick stock. I cut the splines oversized to begin with and glued them into the kerfs. After the glue is dry, you can use a hand saw to trim them and then sand them flush with the sides of the case.

BACK. The last part to make for each case is a back. The back panel is nothing more than a piece of ¼" plywood cut to fit in the rabbeted opening.

I applied a piece of felt to the inside face of the back panel with some spray contact adhesive. But you could use another material to line the back if you prefer, or even just paint it. The back is simply screwed in place, but hold off on installing it until after you've painted the case.

The last step before moving on to the frames of the shadow boxes is to drill shallow holes on the front edge of the case for some rare-earth magnets. The magnets are glued into place with epoxy, but I waited to glue them in until after I was done painting the entire project.

FRAMES

The frame stock for each shadow box is made by gluing up a pair of moldings. Even though all three frames are different, they're all made up from just four simple profiles used in different combinations. The photos at right show the profile combinations for each shadow box frame. And the drawings below show how the individual moldings are made at the router table.

In order to minimize tearout, I routed the deeper profiles in two passes, removing the bulk of the waste in the first pass. Then I increased the depth of cut slightly for the clean-up pass.

Make sure to create enough of each molding profile so that you'll have plenty of stock for all three frames (if you're building all of them). Then glue the moldings together edge to edge to create the frame stock. There are a couple more steps before you can cut the individual frame pieces to length though.

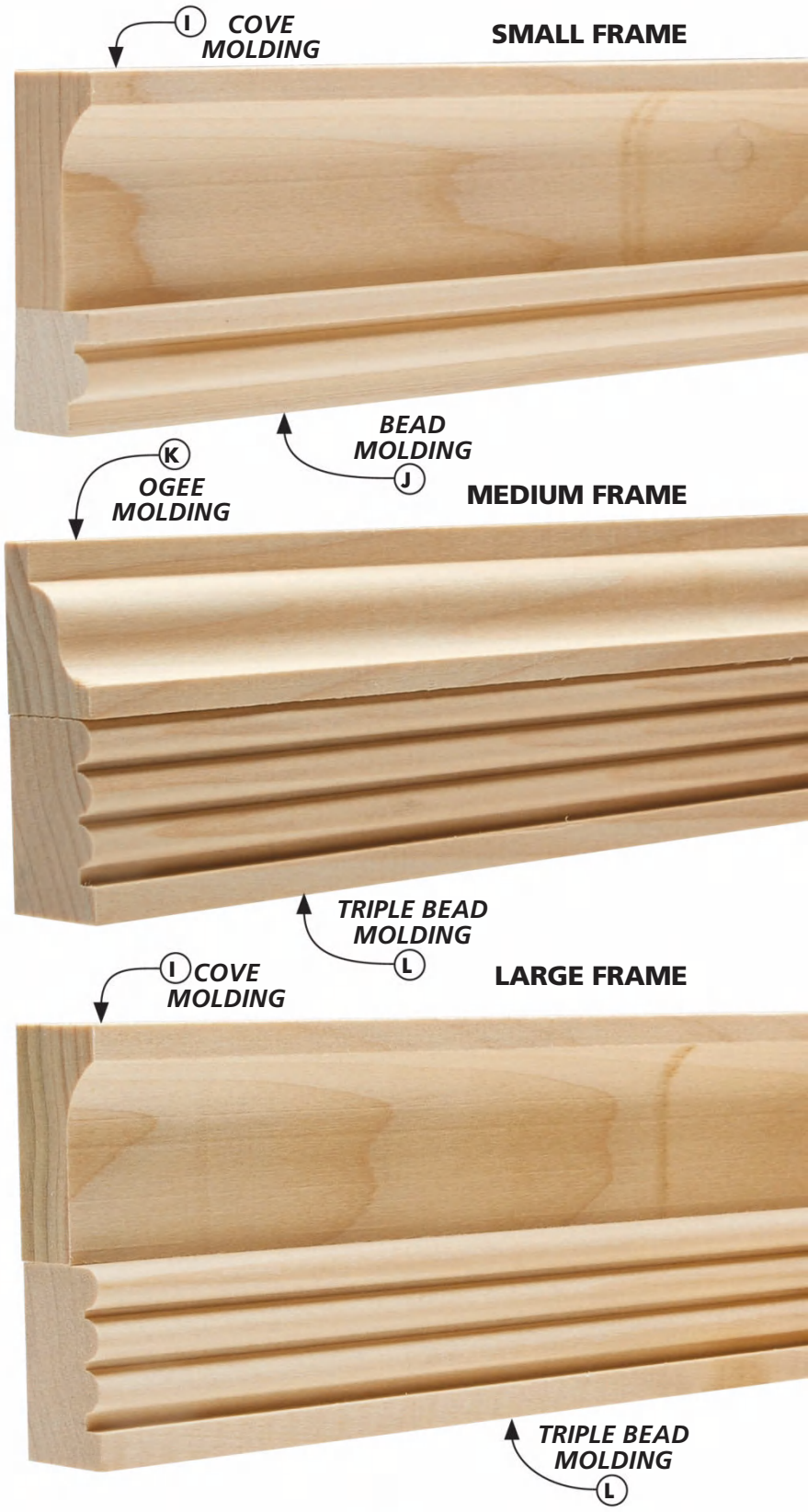

FRAME MOLDING PROFILES

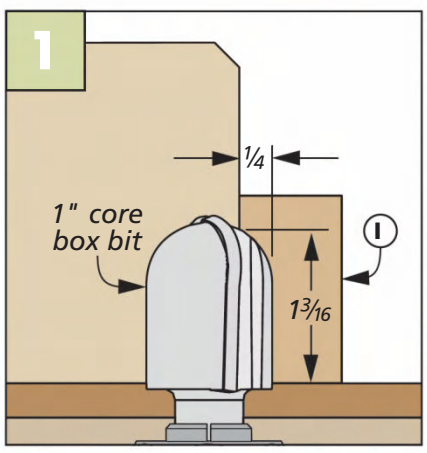

Cove. Rout the cove profile in multiple passes, raising the bit between each pass until reaching the final depth.

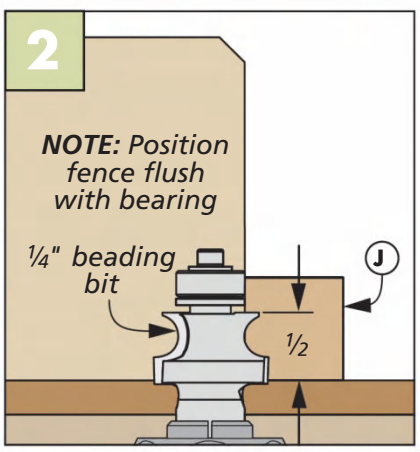

Single Bead. To rout the bead profile, set the router table fence flush with the bearing of the bit.

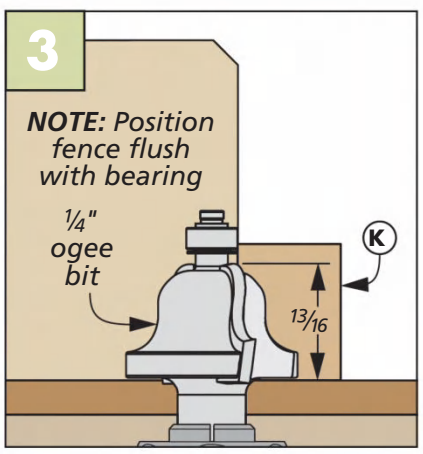

Ogee. The ogee profile is routed in two passes, raising the bit to the final height for the second pass.

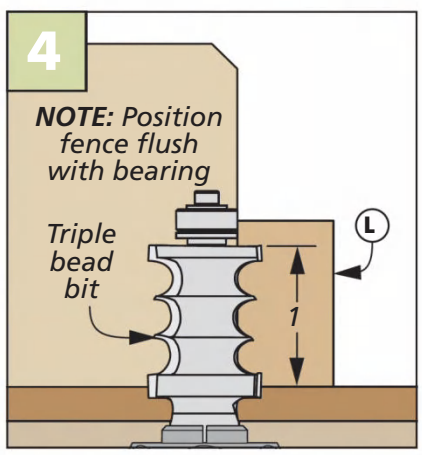

Triple Bead. The triple bead profile is shallow enough that it can be routed in a single pass.

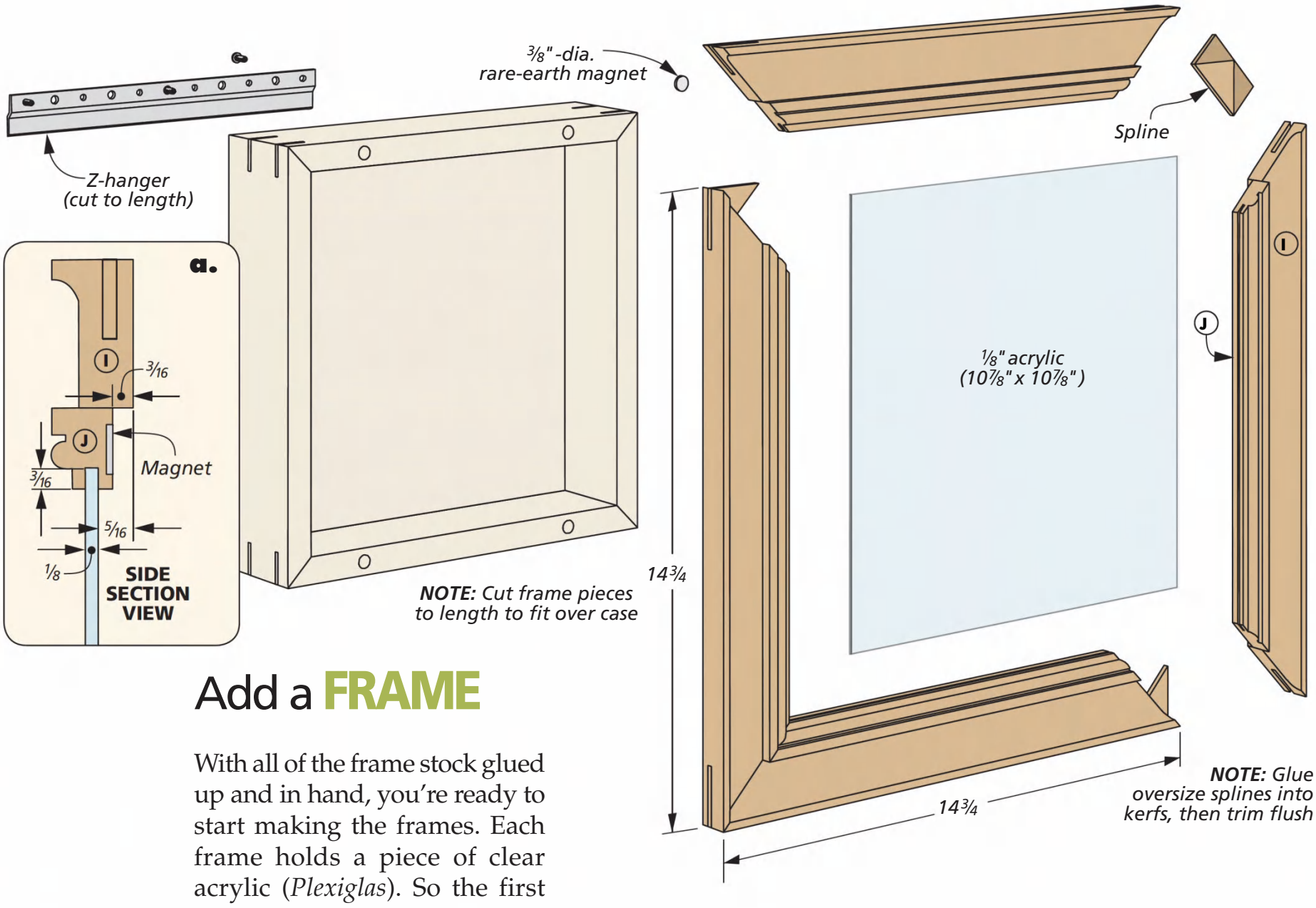

Add a FRAME

With all of the frame stock glued up and in hand, you're ready to start making the frames. Each frame holds a piece of clear acrylic (*Plexiglas*). So the first order of business is to cut a kerf on the inside edge of the frame stock for the acrylic (detail 'a').

The inside face of the frames are also rabbeted to fit over the cases. (You can see this in the lower left photo.) Rather than trying to cut these rabbets after the frames are assembled, it's easier to cut them on the frame stock. So the next step is to set up a dado blade in your table saw to cut a shallow rabbet in the back face of all the frame stock, as shown in detail 'a.'

At this point, you can begin mitering the frame pieces to length. The rabbet on the back of the frame should fit loosely around the case. This will allow for a layer of paint or finish without making the fit too tight.

Once you have all the frame pieces cut to length, dry assemble the frame and measure for the acrylic panel. With the acrylic cut to size, glue the frame up, using band clamps to hold the pieces together while the glue dries.

SPLINES. Like the cases, I reinforced the mitered frame with the use of splines. You can use the same jig as before to cut the kerfs for the splines. After gluing the splines in place, trim them flush with the edges of the frame.

MAGNETS. As I mentioned earlier, the frames are held to the cases with rare-earth magnets. Drill some shallow holes for the magnets in the back of the frame to align with the magnets in the case. Just make sure to check the polarity of the magnets before you glue them in place.

The last step to complete the shadow boxes is to apply a finish (see the article on page 64) and screw the back in place. To hang the shadow boxes on the wall, I used Z-hangers, as shown in the near left photo.

Now comes the fun part of this project — deciding which items you wish to display and how to arrange them. But I'll leave that part up to you. W

▲ The frame is held to the case with rare-earth magnets, making it easy to add or remove items displayed inside.

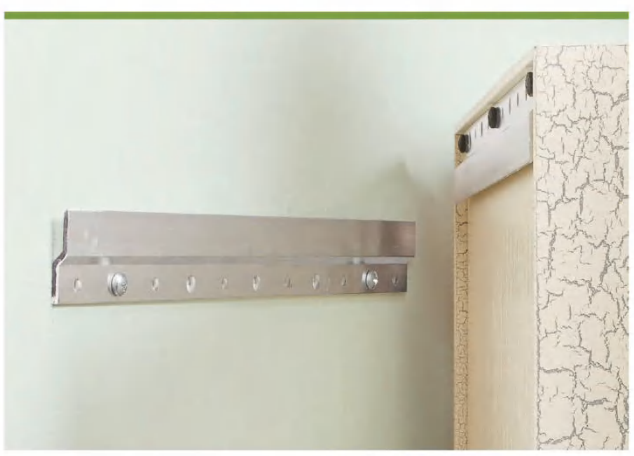

▲ The shadow boxes are mounted to the wall using a low profile, two-piece Z-hanger. This makes installation a breeze.

SHADOW BOX DIMENSIONS

Medium & Large Shadow Boxes. The dimensions for the medium and large shadow box cases and frames are shown below. Keep in mind that the actual dimensions of your finished frames may vary slightly. The key here is to size the frame so the rabbeted opening on the back just fits over the front edges of the case, as shown in details 'a' and 'b.'

When it comes to adding the reinforcing splines to the frames, you'll want to center the kerfs on the edge of the frame as much as possible, to avoid blowing out the front or back face of the frame molding. There's not a lot of thickness at the edge of the medium-sized frame, so you'll have to take care when making those cuts. Again, you can see this in details 'a' and 'b' below.

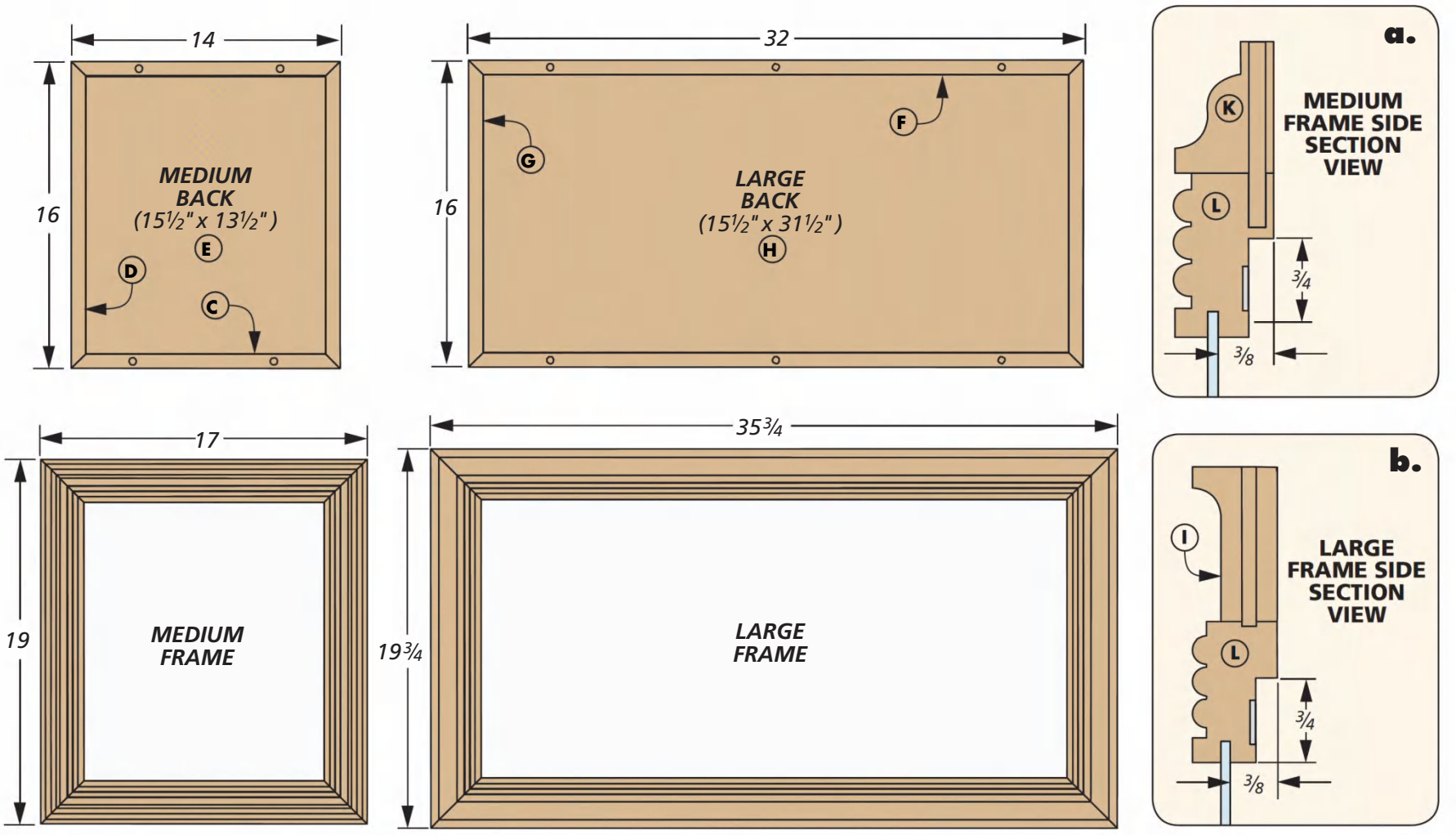

Materials, Supplies & Cutting Diagram

A	Sm. Case Sides (4)	¾ x 3 - 12	**H**	Lg Case Back (1)	¼ ply. - 15½ x 31½	•	(14) 1/16" x ⅜"-dia. Rare-Earth Magnets
B	Sm. Case Back (1)	¼ ply. - 11½ x 11½	**I**	Cove Molding	¾ x 1⅜ - 192 rgh.	•	(28) #6 x ¾" Fh Woodscrews
C	Med. Case Top/Btm. (2)	¾ x 3 - 14	**J**	Bead Molding	¾ x ¾ - 72 rgh.	•	(1) 48" x 48" Sheet of ⅛" Acrylic
D	Med. Case Sides (2)	¾ x 3 - 16	**K**	Ogee Molding	¾ x 1 - 84 rgh.	•	(1) 1 yd. Felt
E	Med. Case Back (1)	¼ ply. - 15½ x 13½	**L**	Triple Bead Molding	¾ x 1¼ - 192 rgh.	•	(1) 12" Z-hanger w/Screws
F	Lg. Case Top/Btm. (2)	¾ x 3 - 32				•	(1) 18" Z-hanger w/Screws
G	Lg. Case Sides (2)	¾ x 3 - 16				•	(1) 30" Z-hanger w/Screws

¾" x 6½" - 72" Poplar (Two Boards 3.3 Bd. Ft. each)

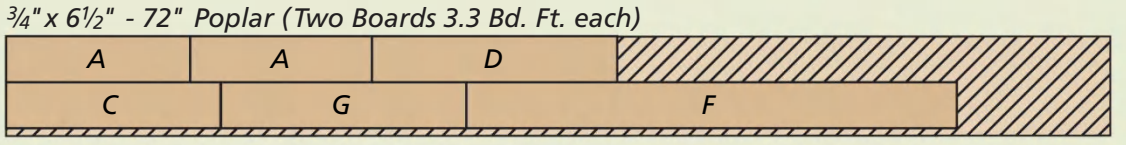

ALSO NEEDED:
48" x 48" sheet of ¼" Birch plywood

¾" x 7½" - 96" Poplar (5.0 Bd. Ft.)

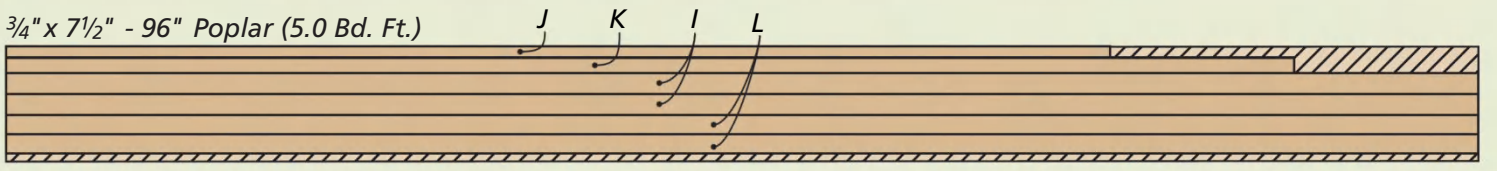

Craftsman
Entry Door

First impressions do count. There's nothing that will add character to the entryway of your home like a custom-made door. This Craftsman-styled door is a classic that will be around a long time.

Of all the architectural styles to choose from for your home, the look that arose from the Arts & Crafts movement is one of the most enduring. The entryways of these homes were often adorned with the no-nonsense elegance of what's known as the Craftsman style. The well-proportioned parts that make up the door you see here are a perfect example of the whole being greater than the sum of its parts. You know — less is more.

But you can't live on understated looks alone. A lot of thought and planning has gone into making this solid-wood door. So outfitting it for a graceful life in the outdoors, as well as indoors, is the next concern.

You have to keep in mind the stress and temperature trauma that this elegant barrier has to go through when guarding your home from the elements. Equipping the light openings with insulated glass is a wise decision. As for a wood that would be worthy — white oak seemed to be the clear choice. It doesn't have to be quarter-sawn, but take your time selecting the material. What you see here is a standard 36" x 80" example of an entry door. If that size works for you, then lets get building.

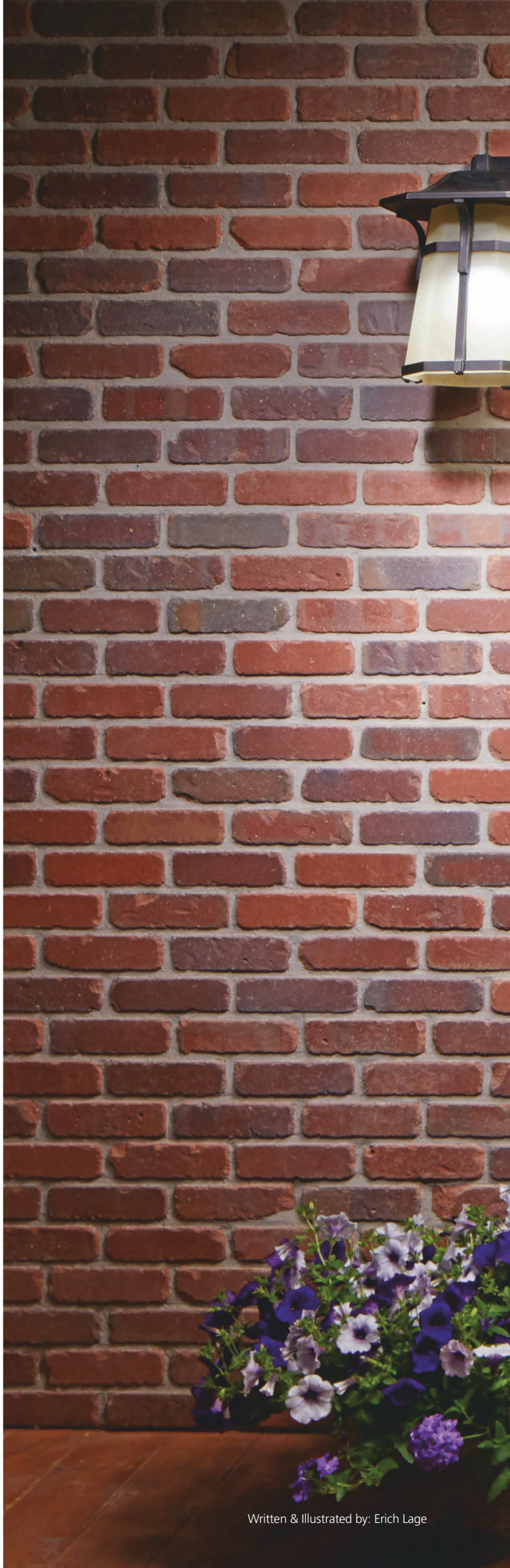

Written & Illustrated by: Erich Lage

Project Design: Chris Fitch

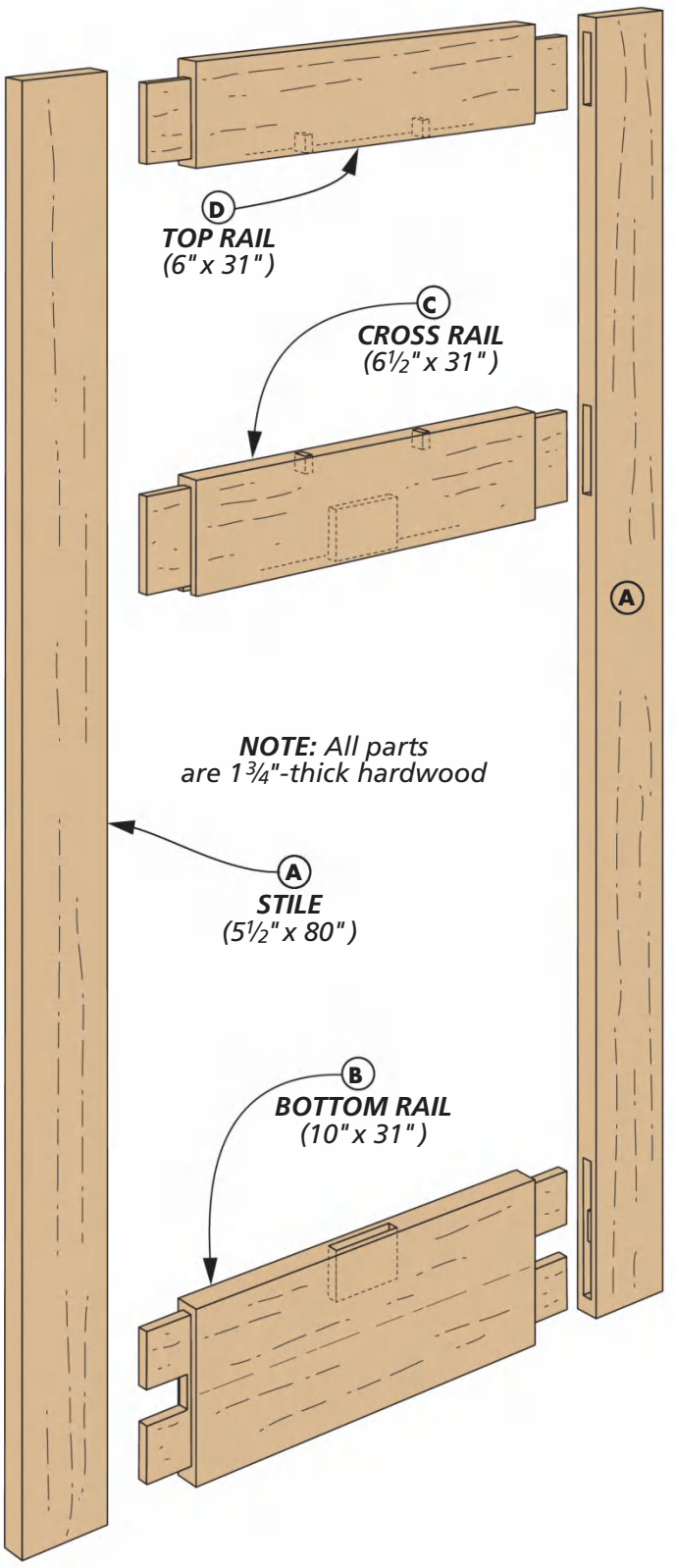

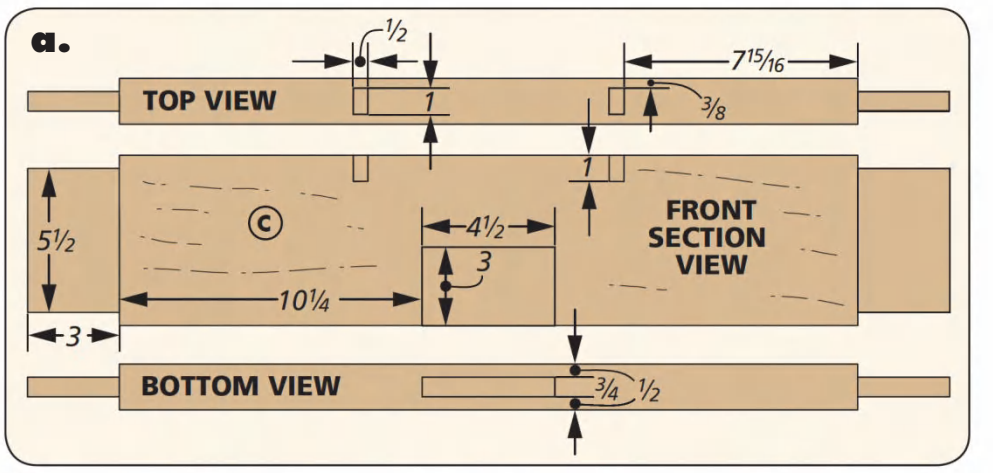

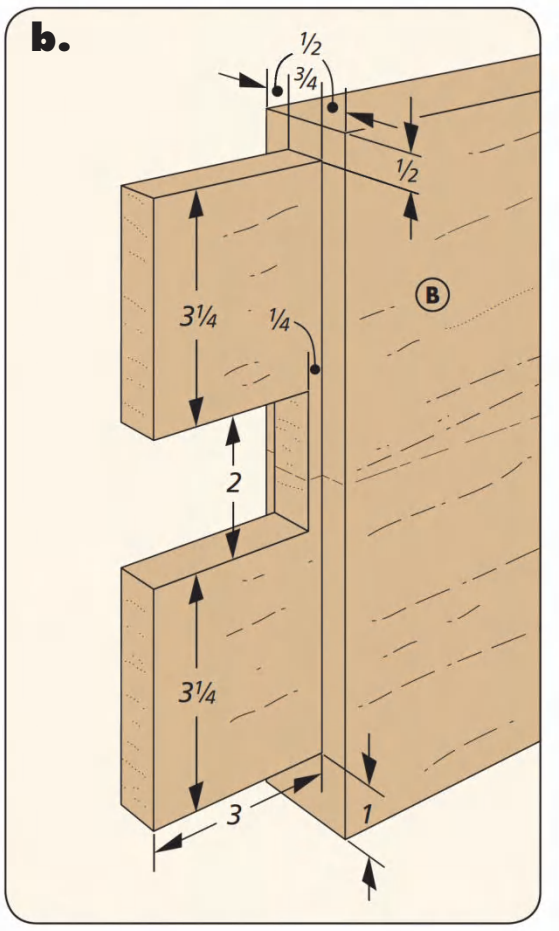

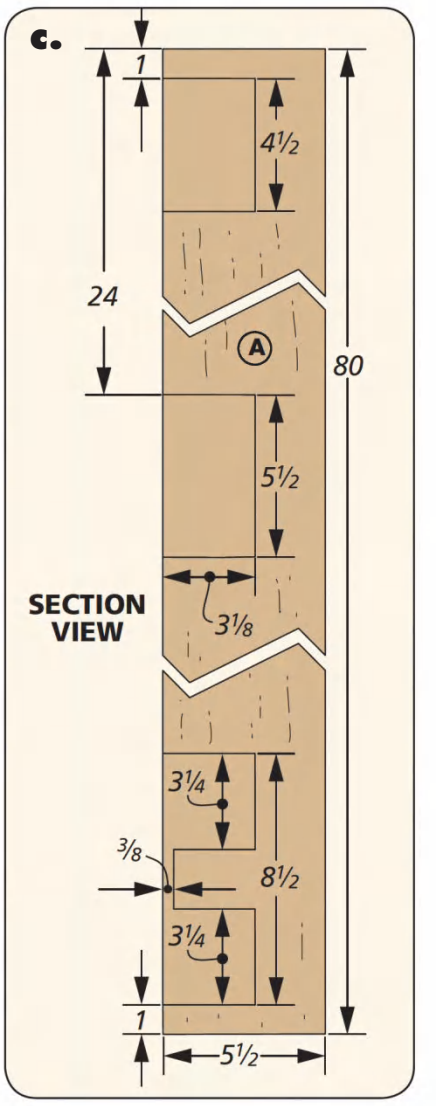

Making the STILES & RAILS

The bones of an entry door, like most cabinet doors, are comprised of stiles and rails, as you see above. Here though, the scale is much larger. So different factors are in play, starting with wood selection.

As I mentioned up front, white oak is the wood of choice for this project. When shopping for the wood for this door, look for material as close to 2"-thick as possible. (The panels are made from ¾" stock.) To make this project a success, the stiles that run the length of the door need to be straight and stable. So when your picking out the material, look for wood that's close to quarter-sawn.

ACCLIMATION. After the shopping was done, I stored the lumber on edge in the shop for several weeks before starting to work with it. Doing this gives the wood a chance to acclimate to the humidity level in your shop.

BE PATIENT. The ultimate goal is to end up with stable stock that is 1¾" thick for the stiles and rails. This is the standard thickness of exterior doors. But getting to that final thickness takes some patience and planning. Planing a small amount off both sides of all the material is the first order of business. And then, you need to wait some more.

It's best to let all the material rest for at least another week before repeating the planing process. Let the wood rest again. When proper thickness is achieved, you can cut all the parts to size.

MORTISE FIRST. Each stile has three mortises to hold the tenons in the rails. As the drawing and details above show, the mortises get incrementally shorter from the bottom up.

SADDLE JIG. These mortises could be done at the drill press with some outfeed support. But I chose to use a plunge router and the jig you see on the next page.

The jig slides over the edge of the workpiece and clamps in place. It's designed to be used with a plunge router and a roughing end mill bit.

BIG MORTISE BEHAVIOR. Here's the next hurdle when doing joinery on a large scale. Due to their size, the cheeks of long mortises can become unstable and start to open up, especially when exposed to varying temperatures like entry doors are.

Detail 'b' on the previous page shows the tenon and the remedy to this problem. By splitting the long, lower mortise into two smaller mortises, you'll strengthen the walls of that area without compromising the joint. Detail 'c' shows the mortise that's needed for this tenon.

This mortise isn't hard to do. First, rout the long shallow portion of the whole mortise. Then reset the jig stops and rout the two smaller mortises at either end. Now you can set aside the stiles and focus on the rails.

RAILS

The stiles are connected with three rails. Each rail is narrower as you go from bottom to top. Speaking of the bottom rail, you'll need to glue up a blank for that. Take a little time to match the grain in these two boards.

TENONS. I cut the tenons over at the table saw using a dado blade. With the miter gauge supporting the rails, use the rip fence as a stop to cut the shoulders for the tenons.

To allow for the split mortise you made earlier, you have to notch the tenon on the lower rail. Use a jig saw to do this. Sand and clean the corners of the notch when the cutting is done.

MORE MORTISES. The rails need mortises for the center stile and mullions that you're going to make shortly. Start with the large mortises in the bottom and cross rail for the center stile.

The mortises for the mullions are wider than they are long. To accomplish this, you need to first adjust the fences on the jig. Then set the stop to hold the router bit in place. These mortises are routed in the cross and top rail. With that, you're ready to move on to making the interior parts of the door frame.

BUILDING & USING THE MORTISING JIG

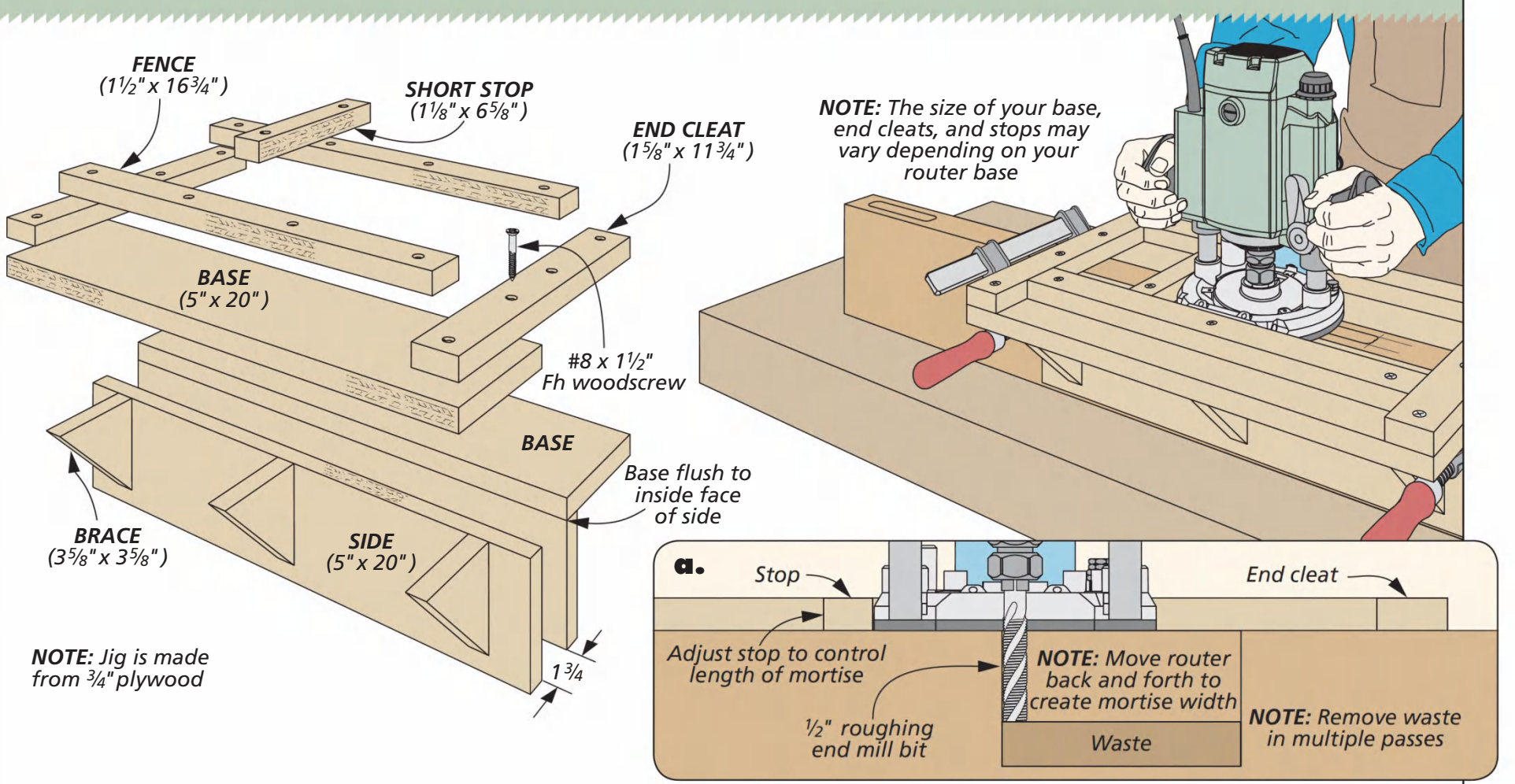

The length of your jig is determined by a combination of the longest mortise, and the base of your router (upper left drawing). To control the length of the mortises, move the position of the short stop as needed. To make the narrower mortise for the mullions, adjust the fence and the short stop.

The Router Setup. A plunge router and a roughing end mill bit (detail 'a') is what I used here. Due to the depth of the mortises on the stiles and rails, it's best to rout them in multiple passes.

Before moving on, I squared up all the mortises with a chisel at the end of the milling session.

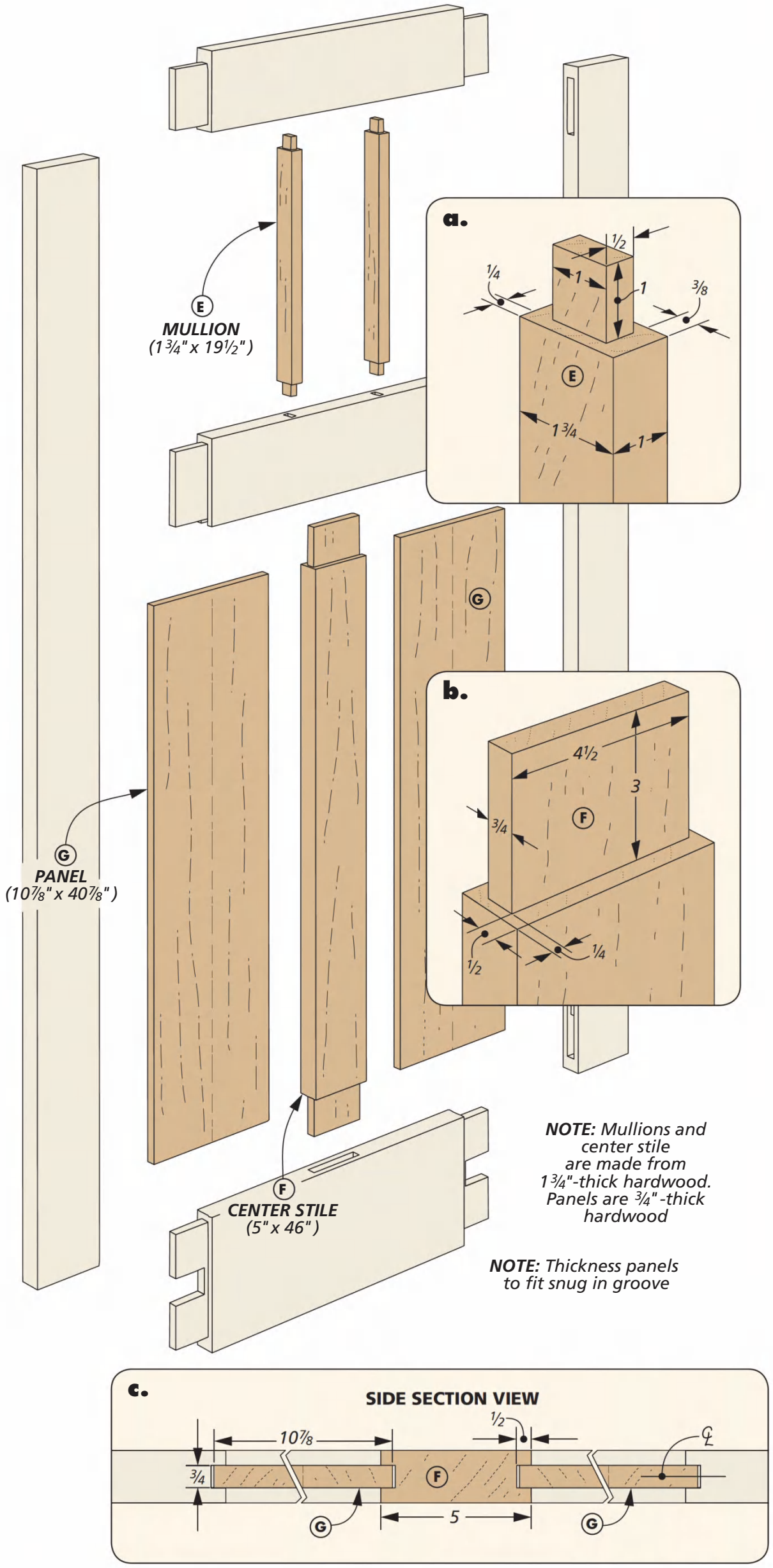

Next up: INTERIOR PARTS

At this point, you've got a strong frame made for your door. It's time to fill out the space within that frame. This involves a pair of mullions, a center stile, and two panels. The panels that you see here are thinner than the stiles and rails. This will provide subtle visual depth to the door. You'll make grooves in the stiles and rails to house the panels in a little bit. For now, let's look closer at the mullions and center stile.

MULLION. A mullion is a vertical member in a door that adds rigidity and divides the space between the two upper rails. They can also support decorative elements of the door. Here, the two mullions are dividers for three insulated glass panes that are held in place with stops.

CENTER STILE. The other vertical part is the center stile. The center stile is joined to the cross rail and bottom rail with tenons. The stile holds the inner edges of the wood panels.

SIZING THE PARTS. As with the stiles and rails, the mullions and center stile should be fully acclimated by this time. So, you can jump right in by cutting them to size. Over at the table saw, make the tenons on each end in the same manner you did on the rails. When you're finished with that task, the panels are the next order of business. As I mentioned, the panels are held in place in grooves in the stiles, rails, and center stile.

DRY ASSEMBLY. To make this groove, you have to dry assemble these parts, holding them together temporarily with clamps. The drawing at the top of the next page (and detail 'a') shows this in action.

I used a stackable slot cutting bit with the bearing on top, in a hand-held router. Like everything else with this door, this is a big groove. So make the groove in shallow cuts. If you don't have a bit this big, you can make multiple passes with a narrower bit.

SQUARE THE SLOT. After knocking apart the frame of the door and stowing away the clamps, take a moment to square the round inside corners of the groove with a chisel.

PANELS. The panels you see in the drawing and detail 'c' are wide enough that they need to be glued up from two pieces of ¾"stock. Match the grain here like you did for the bottom rail. These panels are going to float in the grooves of the door, so you'll want to stain them before installation. With that, it's time to bring all the parts you've made to this point together.

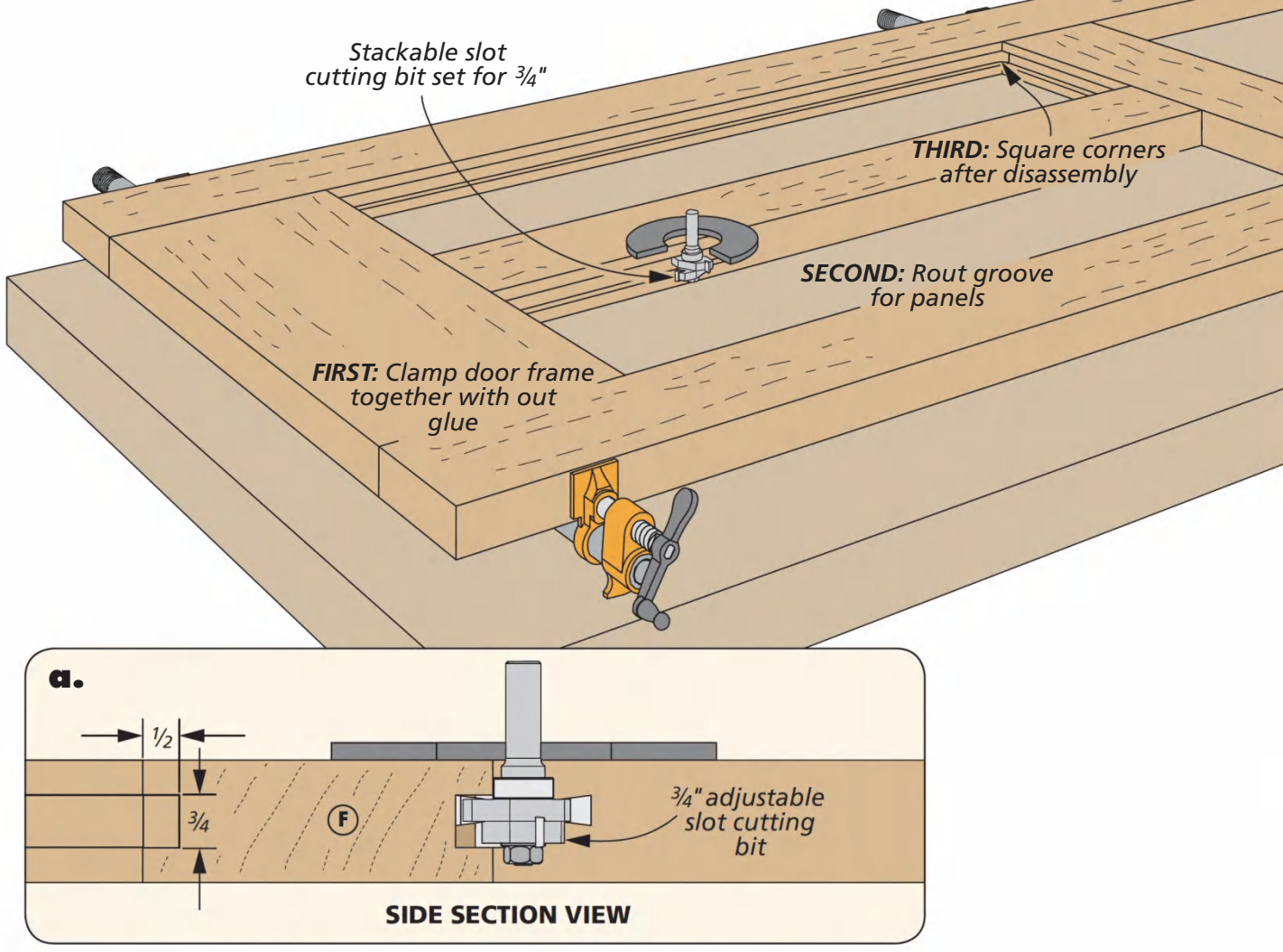

ASSEMBLY

Because of the large size of the door parts and joinery involved, it's best to glue up the door in stages — three stages to be exact. You can see this being done in the box below. It's pretty straightforward, but I want to mention a few things about each step.

RAILS & CENTER STILE. Working from the center out, I started by gluing the bottom rail, center stile, and cross rail together (using a waterproof glue). A good way to ensure that the parts are square and spaced properly is to use the stiles to confirm that the rails are aligned properly (top drawing).

TOP RAIL & MULLIONS. Next, glue the mullions and top rail to the cross rail. Again, use the stiles to ensure everything stays aligned. It's critical that the parts ultimately join to the stiles perfectly.

It's time to bring the panels and stiles together with the parts you've just glued up. Start by sliding the (stained) panels in place. I didn't use any glue in the groove for the panels. Letting them float is okay.

Finally, glue on the stiles. This should be no trouble at all since the stiles have been used all along to align the rails. For good measure, confirm that the door is flat and square. With that, you're ready to add some final details and insulated glass to the door.

ASSEMBLING THE DOOR

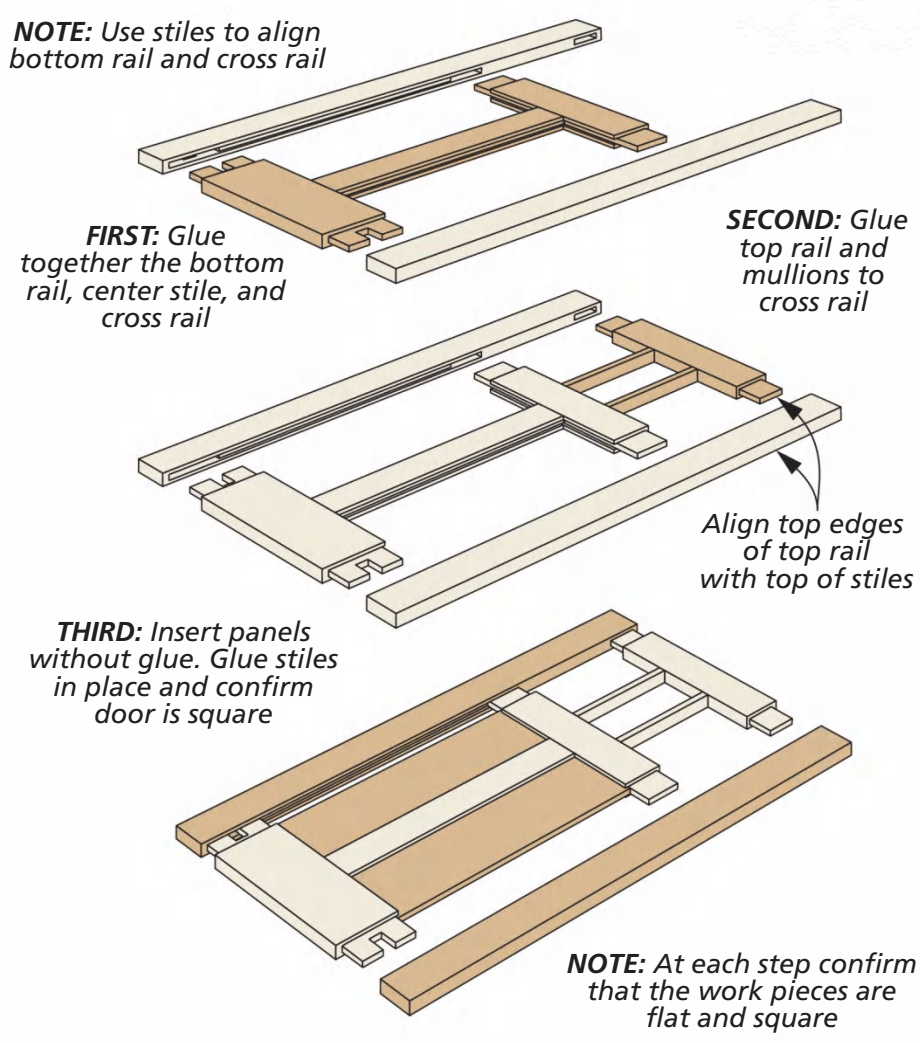

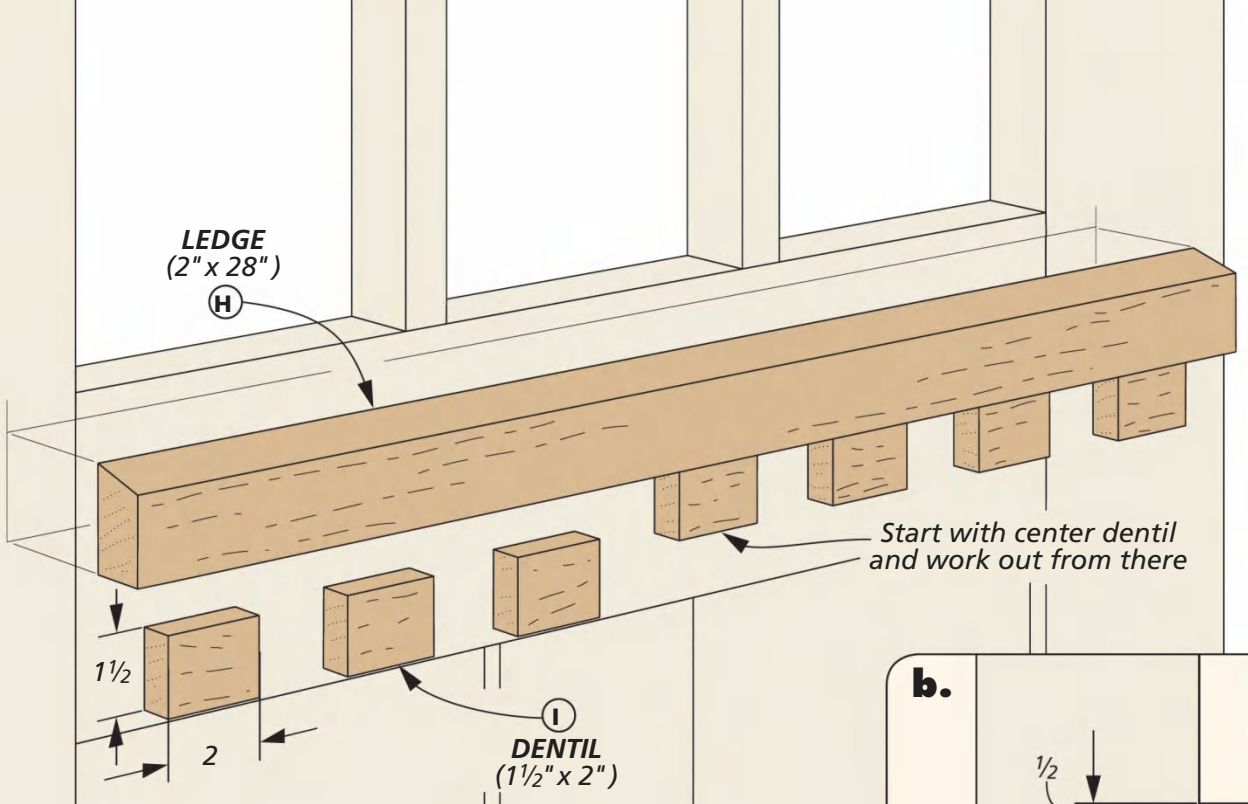

NOTE: *Ledge is made from 1¼"-thick hardwood. Dentils are ¾"-thick hardwood*

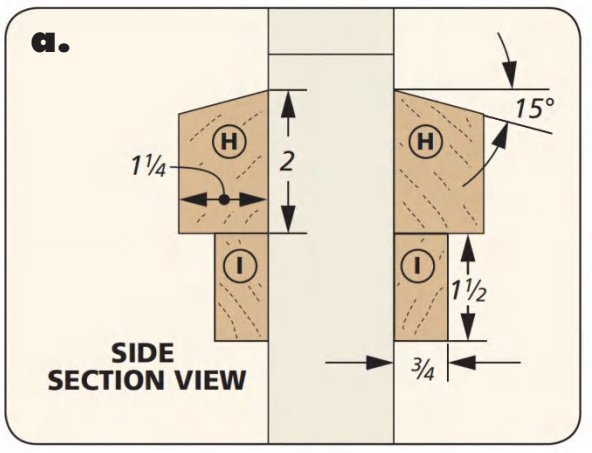

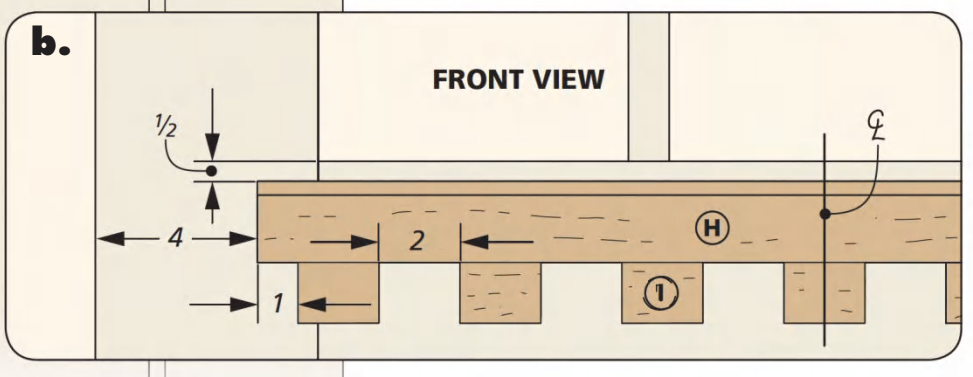

Adding the LEDGES, DENTILS & STOPS

You've finished all the heavy lifting of joinery and assembly on this project (other than installing the door). So now you can focus on dressing out the door.

This starts with beveled ledges that act as decorative accents. These are glued to both each face of the door (drawing and details above), along with a supporting cast of dentils beneath each. You'll follow this up with stops that hold insulated glass panes in the openings.

LEDGES. The most efficient way to start is with the ledges. After cutting them to their overall size, I tilted the saw blade to make the bevel that runs along the top. When the bevel was cut on both pieces, I set them aside and cut the blocks needed for the dentils to size.

The box to the left shows the best way to install the ledges and dentils. You're going to glue all the parts to one side of the door at a time. To begin, I raised the door off the surface of the workbench with some spacers. This provides plenty of clearance for the clamp heads on the underside of the door.

As you can see in the drawing, I clamped a cleat to the door to position the ledge. Next, slip a piece of wax paper under the cleat to prevent any glue squeezout causing trouble.

Now you're ready to glue the ledge to the door with clamps through the window openings. This allows you to get direct clamping pressure.

DENTIL DETAILS. There are seven dentils that are glued to the door underneath the ledge. As you'll notice in detail 'b' above,

GLUING THE LEDGE TO THE DOOR

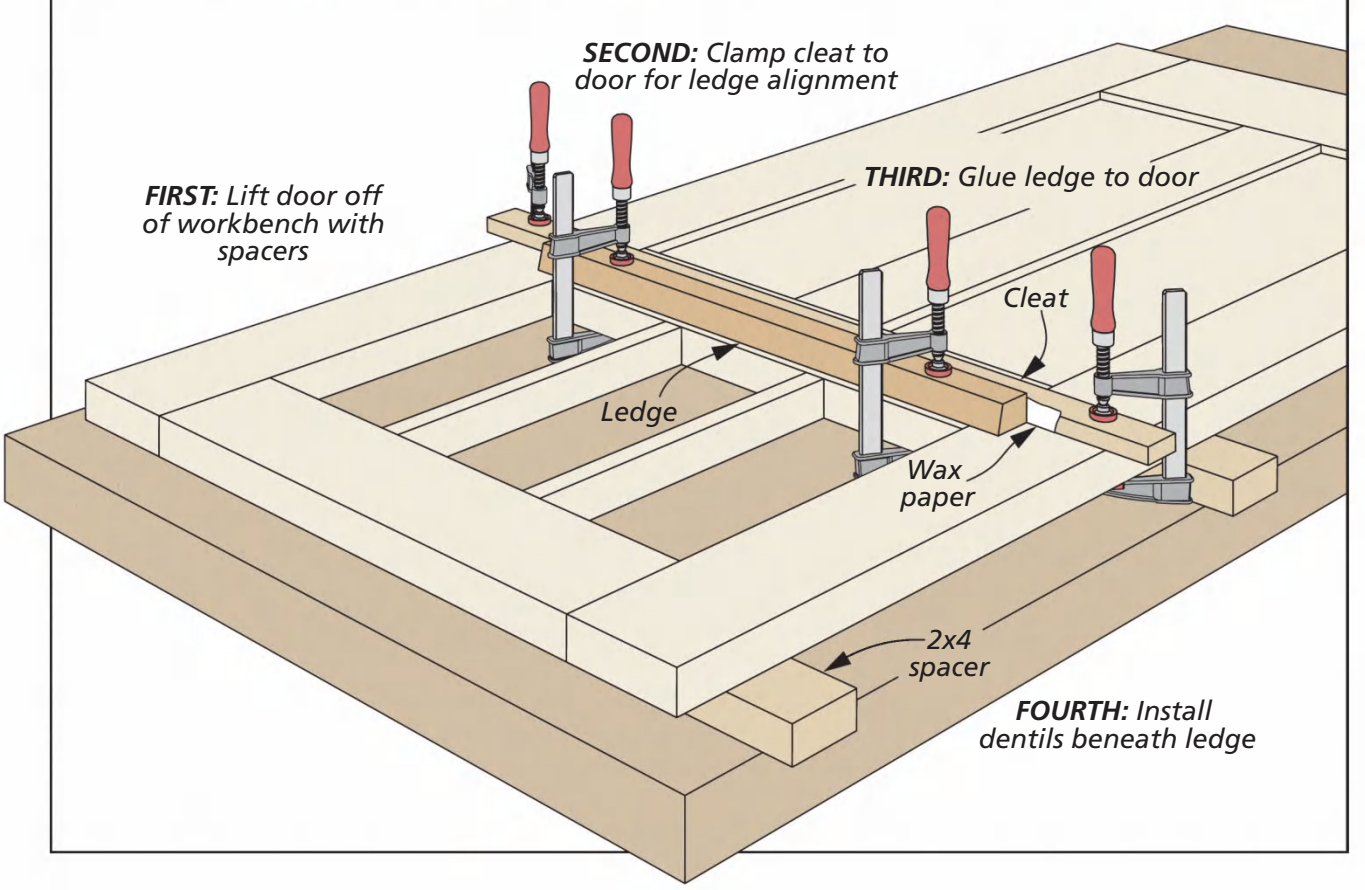

the gap between each dentil is the same as its length. So while cutting them to size, make an extra one to use as a spacer.

Starting from the center, I glued and clamped each dentil in place. This doesn't take long to do and when the dentils are dry, you can repeat the process on the other side of the door. When you flip the door, you'll need to double-up the spacers this time to compensate for the ledge you just installed.

GLASS & STOPS

The last bit of work to be done on the door is to install the glass. To hold the glass in the door, I made the beveled stops you see in the drawing to the right.

THE BEVEL YOU SAY? Yeah, I know beveling the top of the stops is a small detail. But it does play well with the bevel on the ledge, don't you think? To make this bevel, I started by planing the stock to the proper thickness (detail 'a'). Then I tilted my saw blade to rip the stops. A little sanding was in order, and I decided to stain all the stop material ahead of installing it.

To mark, cut, and install each stop, I made a simple jig (box below). The jig is just a plywood base that has two layers of plywood attached to it. These additional layers locate the stop evenly in the opening.

Now you can flip the door and install the glass. First, place a bead of silicone on the inside of the stops. Then insert the glass in the openings. Another series of well placed beads of silicone is in order. Follow this up with cutting and nailing the remaining stops to hold the glass in place.

This is a perfect time to finish the door. I used an oil-based gel stain and a top coat of polyurethane. Now it's time to hang your door.

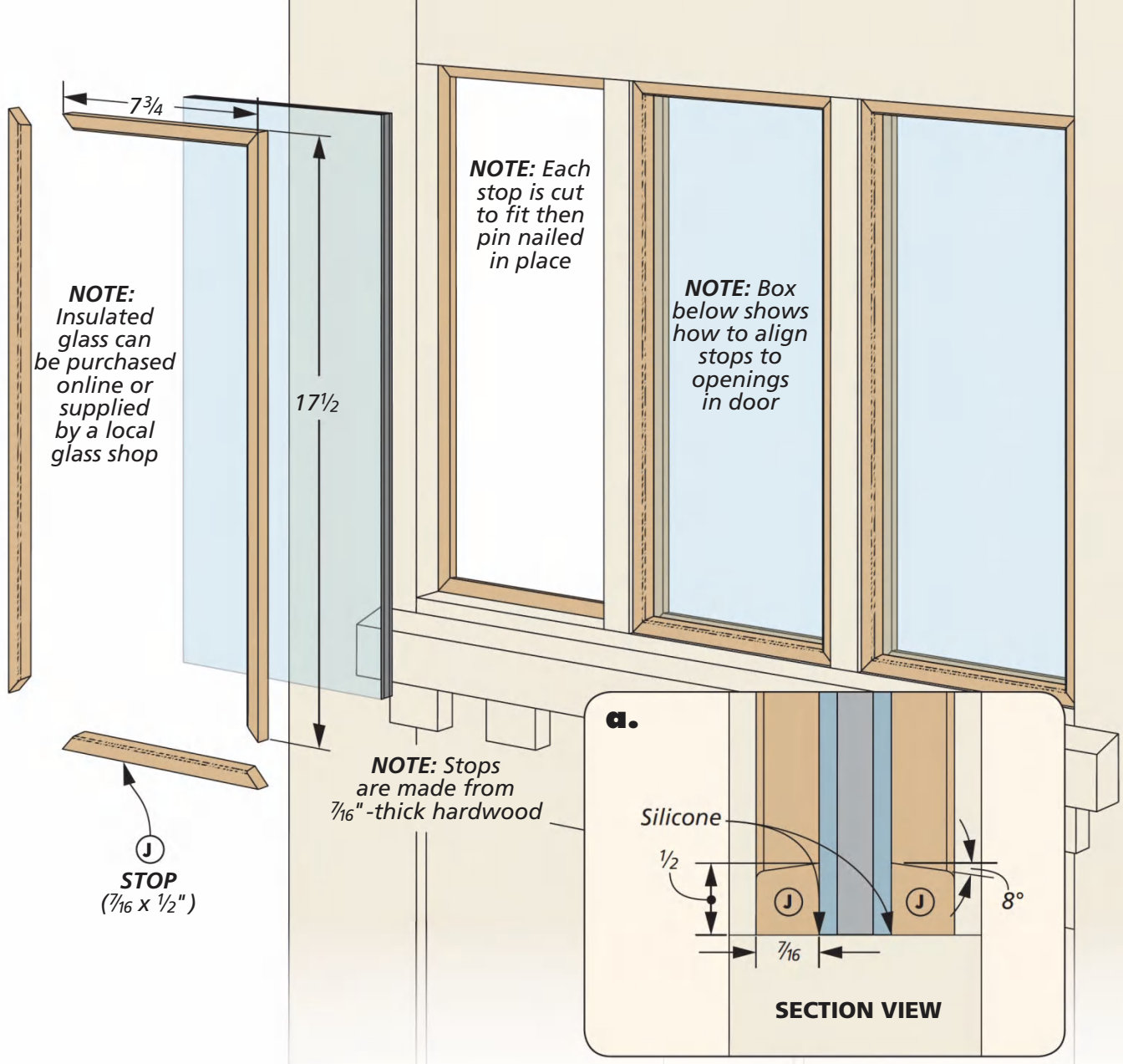

INSTALLING THE STOPS

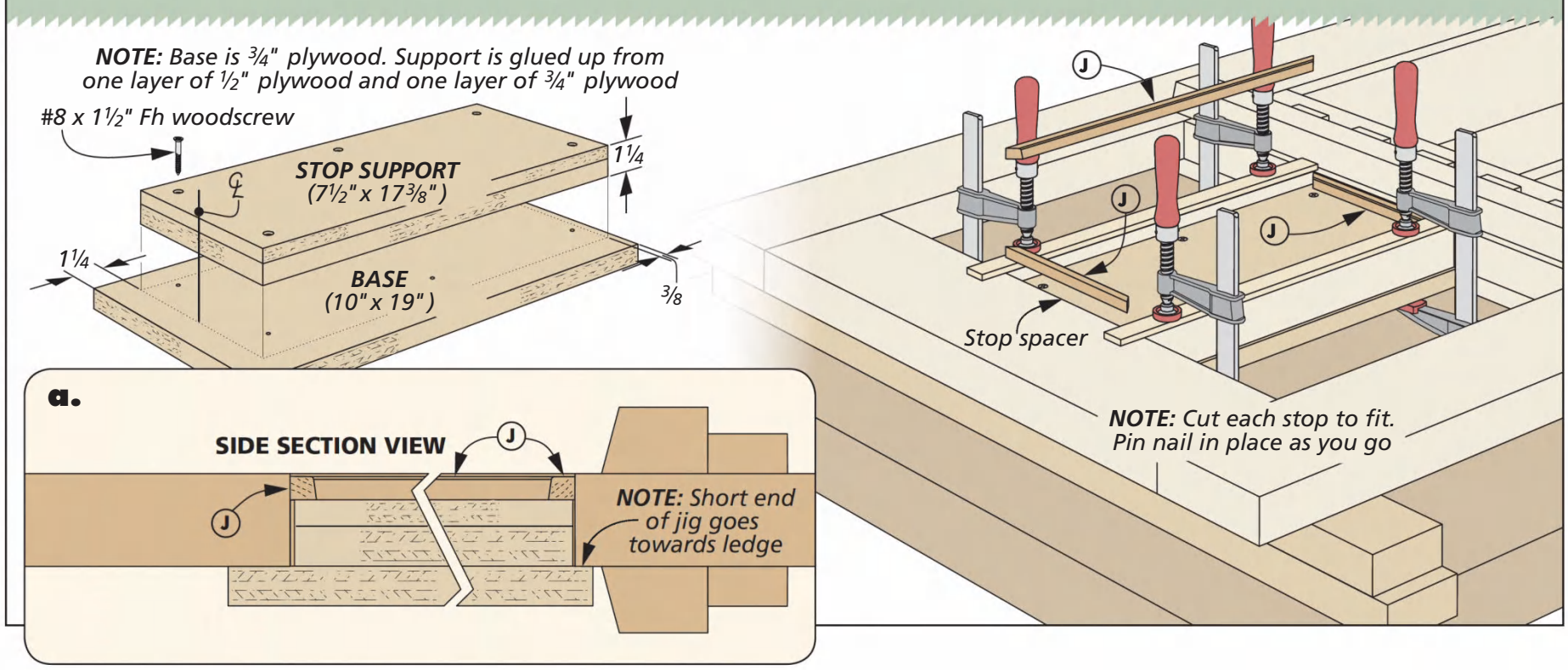

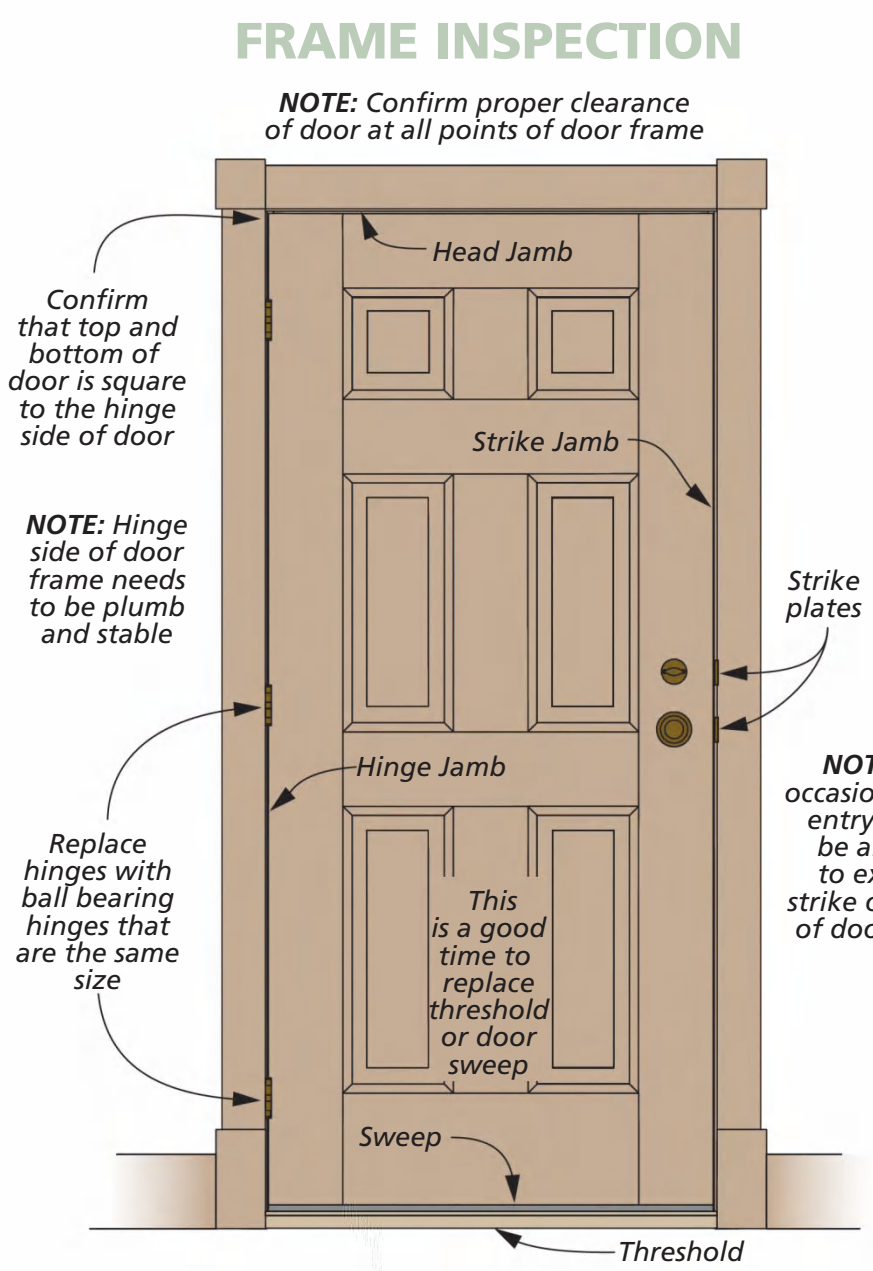

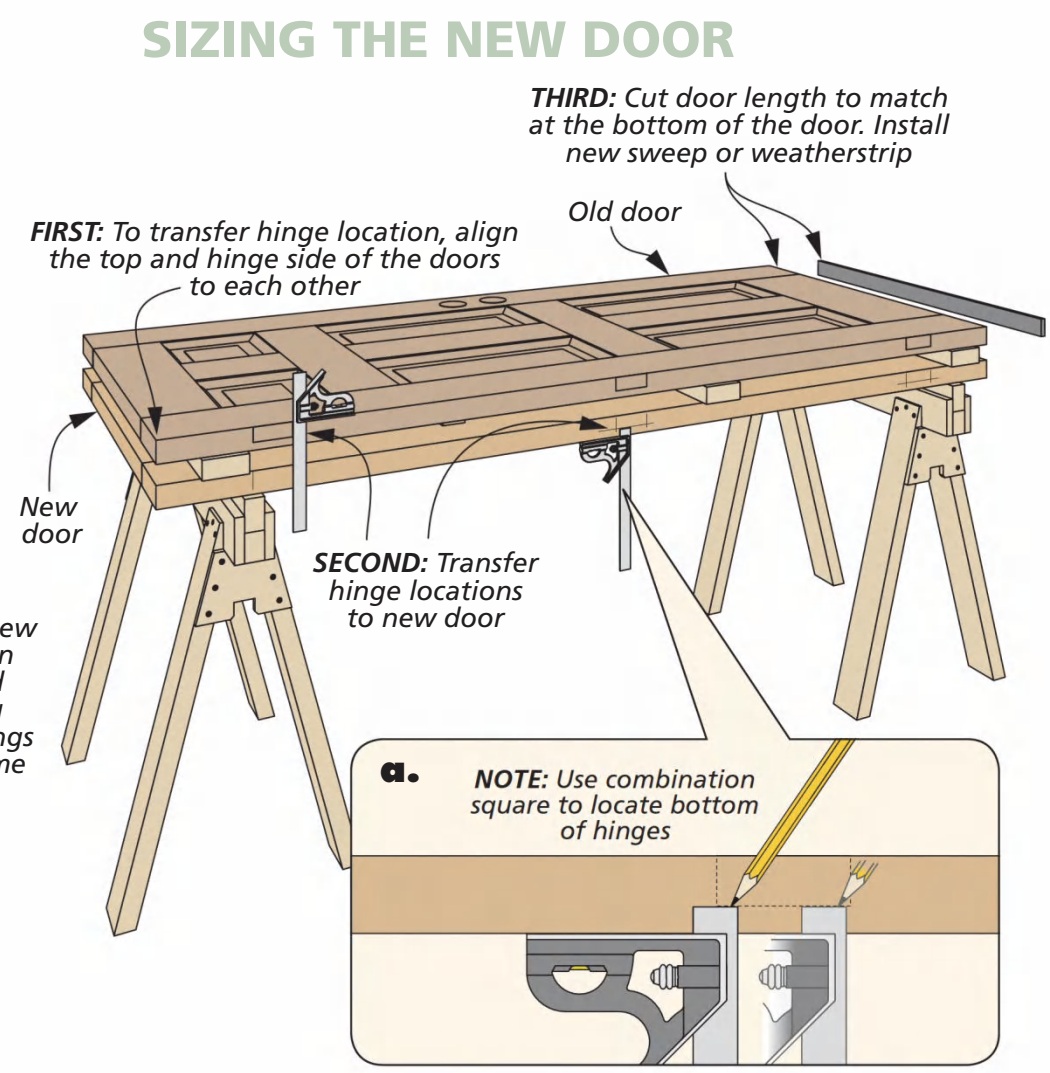

Installing the DOOR

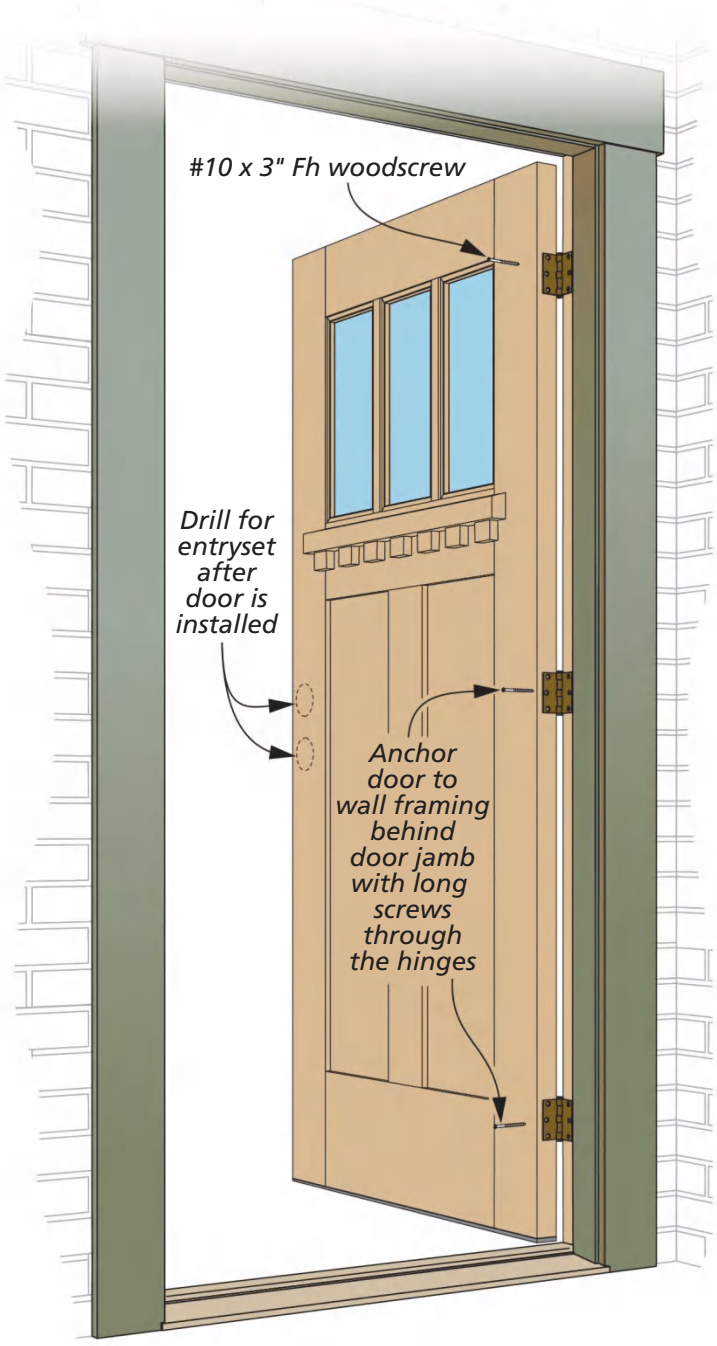

The existing door I'm replacing works just fine in its door frame. I came to that decision based on the inspection that is shown in the left side of the drawing above. The steps shown here are done with the old door still hanging in the frame.

FRAME INSPECTION. The inspection always starts at the hinges. When working with doors and their frames, the backbone of the operation is the jamb that the hinges are attached to. So you need to confirm that the hinge jamb is plumb and stable enough for the new door.

Next, you'll want to examine the gap between the door and the other three sides of the frame. The gap should be consistent between the head and strike jamb. Not only when the door is closed, but as you open it, the door shouldn't touch the frame. The threshold at the bottom of the door is a different matter.

The types of thresholds in entryways can vary greatly. You'll have to do some homework to make sure you have an air-tight fit for your new door.

Now you can remove the old door, along with the hinges and handset (dead bolt also). Use it to transfer the door size and shape to the new door.

SIZING THE DOOR. As the drawing above shows, the top corner on the hinge side of the door will be the point of reference for all measurements. Confirm the length of the door on the hinge side. If the new door needs to be trimmed, you'll most likely do it at the bottom of the door. But wait to do that until confirming a few more things.

DOOR PROFILE. You'll want to use a framing square to confirm the old door is square at the top and bottom. If not, transfer the angles to the door (again, this will most likely be on the

bottom of the door). Once those are confirmed, compare the lengths of the two doors on the handle side of the door.

BEVEL CUTS. Use a circular saw and shop-made straightedge to trim the door to size. Scoring the cut line with a utility knife first helps reduce chip out. And adding a slight bevel (5°) to the cuts will allow the door to open and close without binding.

When making the beveled cuts, you want the outside of the door to be smaller. To finish this phase, ease any of the edges you've cut and seal them with stain and top coat.

HINGES. The ideal way to transfer the location of the hinges to the new door is to use a combination square to lay out the width and depth of the hinge on the edge of the new door.

For simplicity, I chose new hinges the same size as the old ones. I replaced the hinges with high-quality, ball bearing hinges. Use the square to transfer how far in the hinge sets on the door edge. Then use a chisel (or small router) to cut the mortises so the hinge sits flush.

HINGES. To avoid stripping out the screws, you'll have to predrill the holes for the hinges in this white oak door. Moving to the door frame, use one of the hinge leaves to confirm that they set flush in the jamb. Then you can install the hinges. Use at least one long screw in each hinge leaf to secure it to the jamb framing.

The sky is the limit when it comes to the hardware you select for your new door. The entryset shown here requires a jig to drill the mortise in the edge of the door.

MOMENT OF GLORY. Have a friend help hang the door. If it rubs anywhere, a little planing or sanding should remedy that problem. To finish this fine project, install the entryset using the manufacturer's instructions. W

Thanks to House of Antique Hardware Inc, for providing the entryset for this article.

Materials, Supplies & Cutting Diagram

A	Stiles (2)	1¾ x 5½ - 80	**F**	Center Stile (1)	1¾ x 5 - 46
B	Bottom Rail (1)	1¾ x 10 - 31	**G**	Panels (2)	¾ x 10⅞ - 40⅞
C	Cross Rail (1)	1¾ x 6½ - 31	**H**	Ledges (2)	1¼ x 2 - 28
D	Top Rail (1)	1¾ x 6 - 31	**I**	Dentils (14)	¾ x 1½ - 2
E	Mullions (2)	1 x 1¾ - 19½	**J**	Glass Stop	7/16 x ½ - 310" rgh.

- (3) Insulated Glass (7½" x 17⅜")
- (3) Ball-Bearing Hinges w/ screws
- (1) Exterior grade Entryset and Dead bolt

¾" x 6" - 84" White Oak (Two Boards @ 3.5 Bd. Ft. Each)

¾" x 4" - 96" White Oak (2.7 Bd. Ft.)

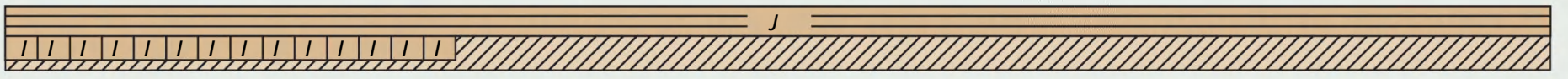

1¾" x 5½" - 60" White Oak (4.6 Bd. Ft.)

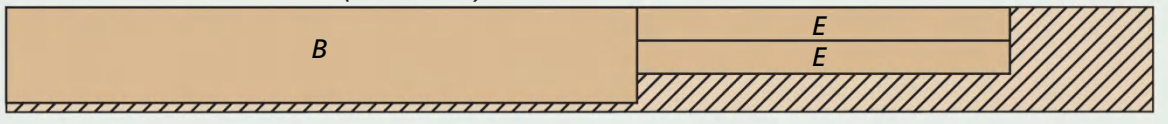

1¾" x 5½" - 84" White Oak (6.4 Bd. Ft.)

1¾" x 6" - 84" White Oak (Two Boards @ 7.0 Bd. Ft. Each)

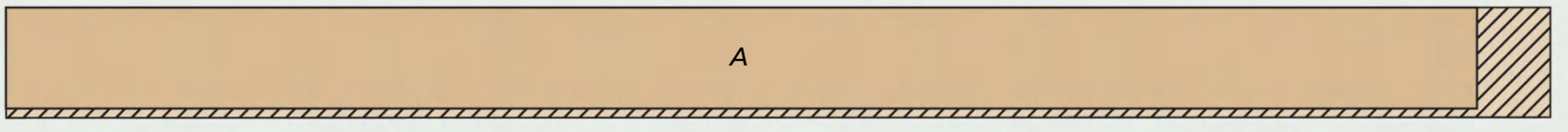

1¾" x 7" - 96" White Oak (9.3 Bd. Ft.)

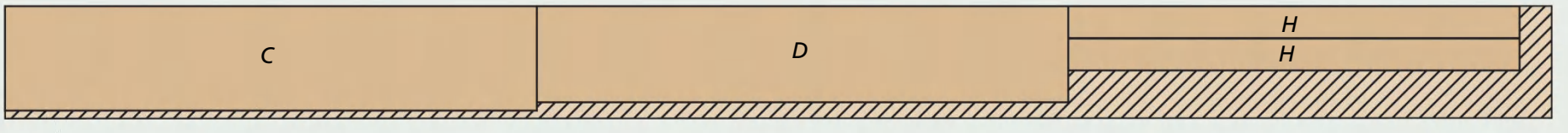

▲ A bundle of drawers (main photo) offers storage for nearly everything you need in your shop. The large drawer beneath the table saw creates the perfect storage space for those large, bulky items like portable power tool cases.

▲ The workstation has a built-in router table. The router is housed inside the cabinet, which offers a large surface to rout long workpieces. An adjustable fence with integrated dust collection attaches directly to the top of the station.

Written by: Logan Wittmer; Project Design: John Doyle

All-in-One Workstation

Get the most out of your shop space by combining tools into a compact station. This workstation packs loads of storage and tools in a mobile bundle.

Thinking back to my first shop, it was set up in the garage of my house. Living in the Midwest, weather often forced me to move my tools out of the way to make room for vehicles. I must say —when I was in the middle of a project, it was a big hassle. I would have to move everything from my bench to my table saw. Not to mention cleaning up all the dust and power cords that I had strung all over. When I first saw the design for this workstation, and all the features packed into the compact footprint, I realized how much easier my life could have been.

THREE TOOLS, ONE FOOTPRINT. Looking at the photos to the left, you'll notice this mobile workstation packs (at least) three tools into one. On one end, a benchtop table saw sits on a low table. The main worksurface of the station acts as the perfect outfeed support for the saw. On this worksurface, there's an opening for a router plate that turns the top into a router table. Finally, opposite the table saw is a flip-top with a thickness planer mounted to one side.

BUT WAIT, THERE'S MORE. One thing that you might not think about as you look at the mobile workcenter is the size of the worksurface itself. It's the perfect canvas for assembling projects and serving as your main or auxiliary workbench. That's not to mention the vast amounts of storage packed below the top in the form of drawers and shelves.

▲ By attaching a tool to the flip-top section of the workstation, you can quickly and easily rotate it into working position. A pair of shop-made latches lock the top in position for use. It's a perfect option for those heavy tools that you use often.

Illustrations: Dirk Ver Steeg

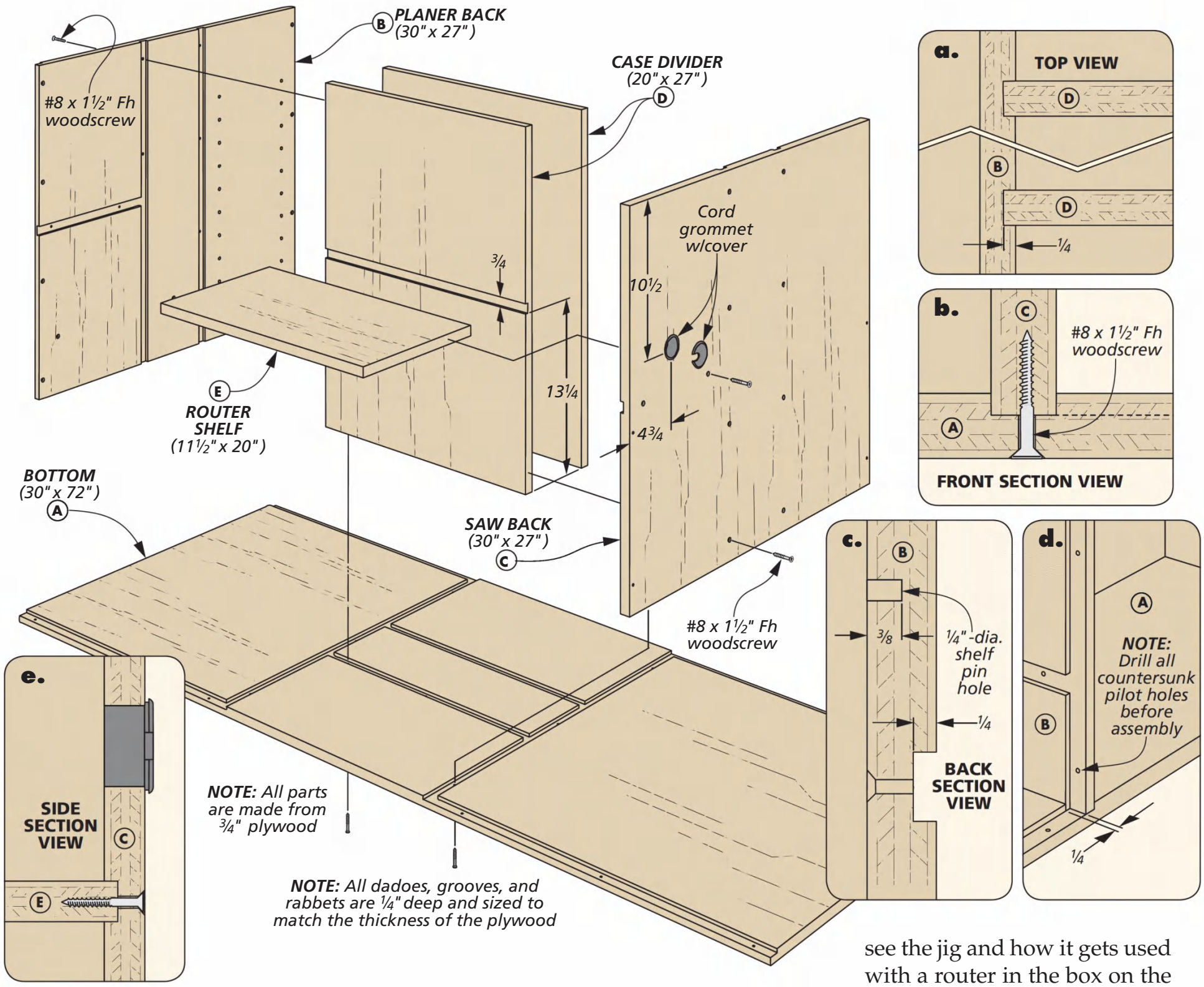

Building the **CASE**

One of the things I like about this mobile workcenter is that it's made mainly out of plywood. This means in a short amount of time you can have all of the panels cut and ready to tackle the joinery.

When breaking down plywood sheets, I use a shop-made guide with my circular saw. But a track saw like the one on page 14 could easily do this job.

I started the workstation by first tackling the main case of the cabinet. This is simply a bottom and a series of dividers and partitions.

THREE ZONES. The mobile workstation can be divided into three areas — the table saw base, the router table, and the planer section. The router table is the center of the whole operation, so it's a good point to build out from.

After cutting the bottom, planer back, and table saw back to size, I wanted to tackle all of the joinery needed to connect everything. The joinery consists of a series of grooves, dadoes and rabbets in nearly every part of the case.

To cut the dadoes and grooves in the large workpieces, I decided to use my router with a shop-made dado jig. You can see the jig and how it gets used with a router in the box on the next page.

After laying out the joinery, I cut the dadoes in the base for the backs first. Then, I repositioned the dado jig to cut the grooves for the case dividers. These grooves start and end in the dadoes for the backs, so be careful as you start and finish these cuts.

While I had my router in hand and was working on the base, I went ahead and cut the rabbets for the planer and table saw sides. Here again, these rabbets start and end in the dadoes. Now set the base aside while you work on the backs.

SHELF HOLES & GROOVES. Both of the backs get a couple of grooves cut in them for the case dividers. Also, there's a dado in the

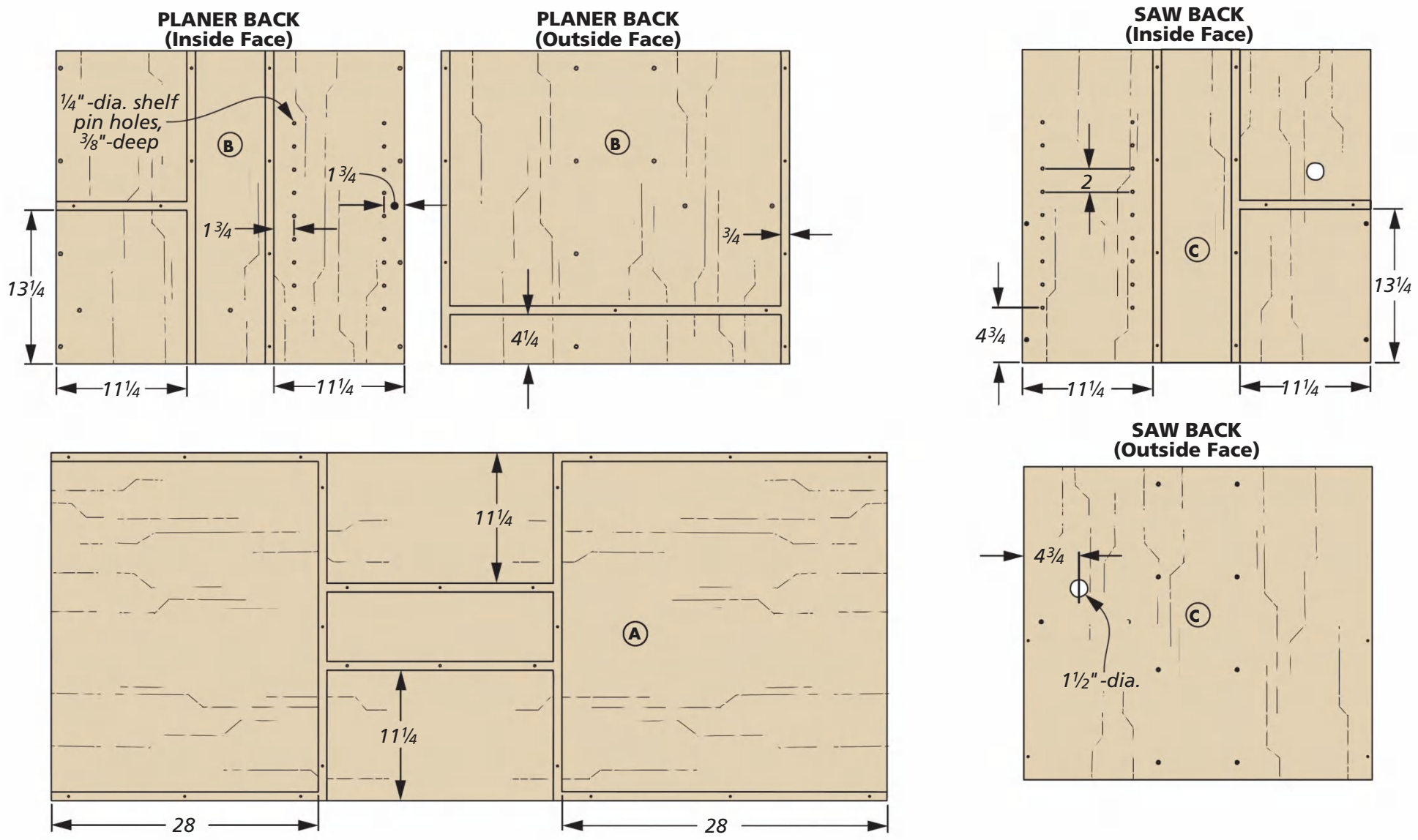

backs and one divider for the router table shelf (see main drawing). Again, I cut these with the router and guide.

Now you can trade your router out for a drill. On the opposite side of the router shelf, there's a series of shelf pin holes that will hold pins for adjustable shelves. Take care of drilling those holes next. Use some tape or a stop collar to keep from drilling through the back of the panels. Finally, a hole is drilled in the table saw back that you'll feed the router's power cord through later.

ASSEMBLY. Now you're ready to assemble the backs with the case dividers and router shelf. Use a good bead of glue in each of the dadoes and grooves, then drive some screws home to hold everything tight. At this point, I flipped the center assembly over so I could install the bottom. An extra set of hands will help in positioning the bottom before gluing and screwing it in place.

ROUTING DADOES & GROOVES

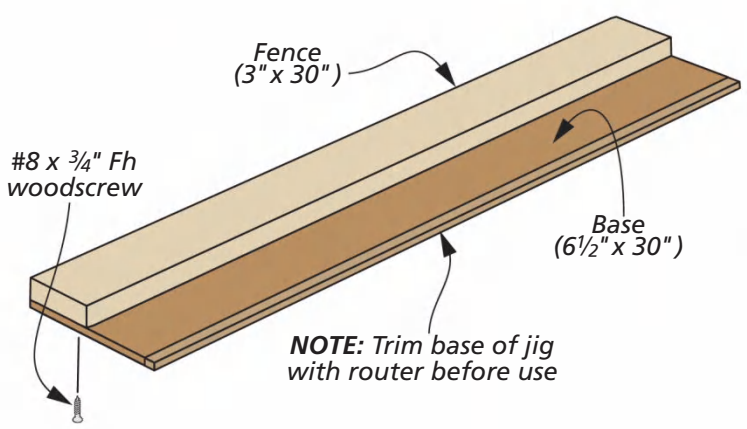

Rout Next. Use a router with a ¾" plywood bit to rout the dadoes and grooves. Rout left to right, cutting the grooves and dadoes in one pass.

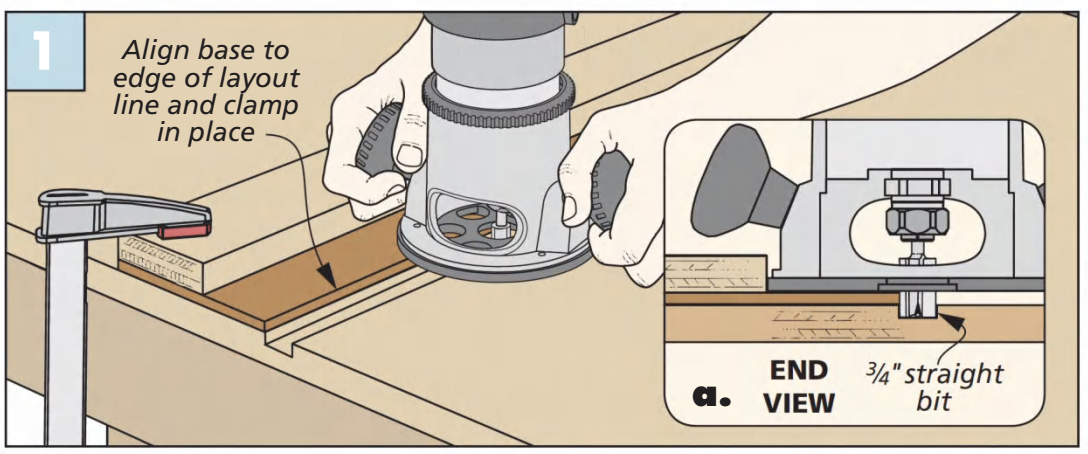

Router Jig. To cut the dadoes and grooves in the panels, first lay out the position of each one. Clamp the guide along one side of the layout lines. Rout the dadoes and grooves in one pass, from left to right.

Add the SIDES

With the core of the workcenter complete, you can turn your focus to each end. On one end, a short case and drawer will support a top for your saw. On the opposite end, a large cubby makes room for the flip-top with attached planer. Below that, a smaller drawer offers some storage. The first thing is to finish the ends in preparation for the tops.

PLANER WALLS. Focusing on the planer end first, I cut the sides and shelf to size. Then, I cut the dadoes in the side panels for the shelf. Here, I used my router and the same dado jig from before. The last thing to do with the panels is to drill pocket holes along the top edge. These will be used to attach the top that will be added later.

With the parts cut, you can install them on the case. Here again, everything is glued into the dadoes and rabbets and installed with screws. The sides are screwed from the bottom and along the inner edge (details 'b' and 'c').

CROSS BRACES. Cut four cleats for the center of the case. To install them, drill a pair of pocket holes on each end and attach them with screws. See the drawing below for the final positioning. These will also be used as attachment points for the top.

TABLE SAW PLATFORM

Now move to the other end of the workcenter. Here, you'll work on the platform for the table saw top. The construction follows suit from the planer end. The sides are cut and installed using screws and glue. A pair of cleats, similar to the ones you just installed, connect the two sides (upper drawing, next page).

MAKE IT MOBILE. After finishing and installing the side panels on both ends, you're done driving screws through the bottom. Now you'll add a pair of hardwood support strips along the bottom edge. These help support the weight of the cart, add rigidity, and provide a mounting point for a set of casters. You can see these in the illustration on the next page. After gluing the strips in place, install the casters with a handful of lag screws (detail 'a' on the next page).

ADD STORAGE. With the foundation of the cart in place, let's talk about storage. Keeping

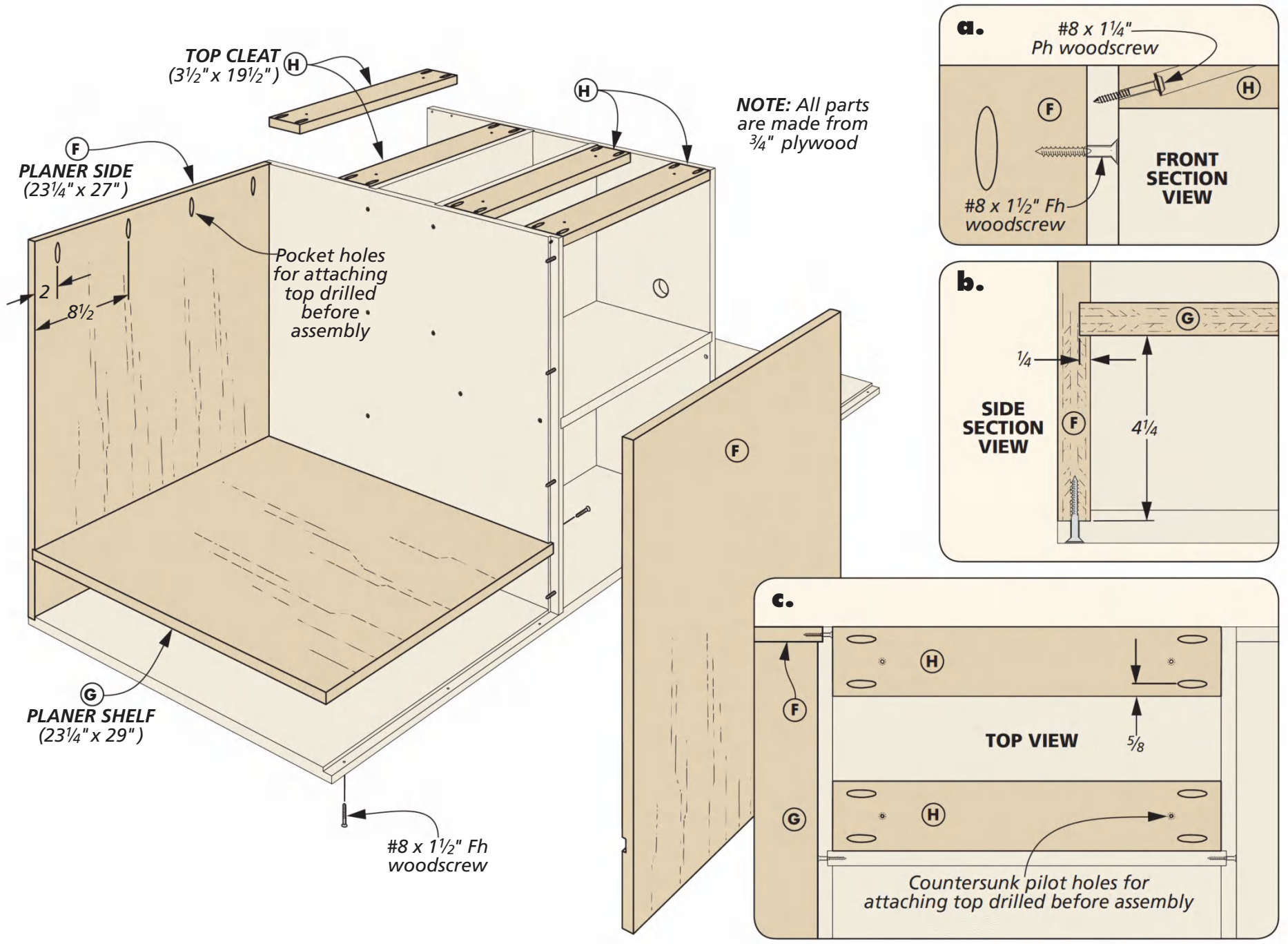

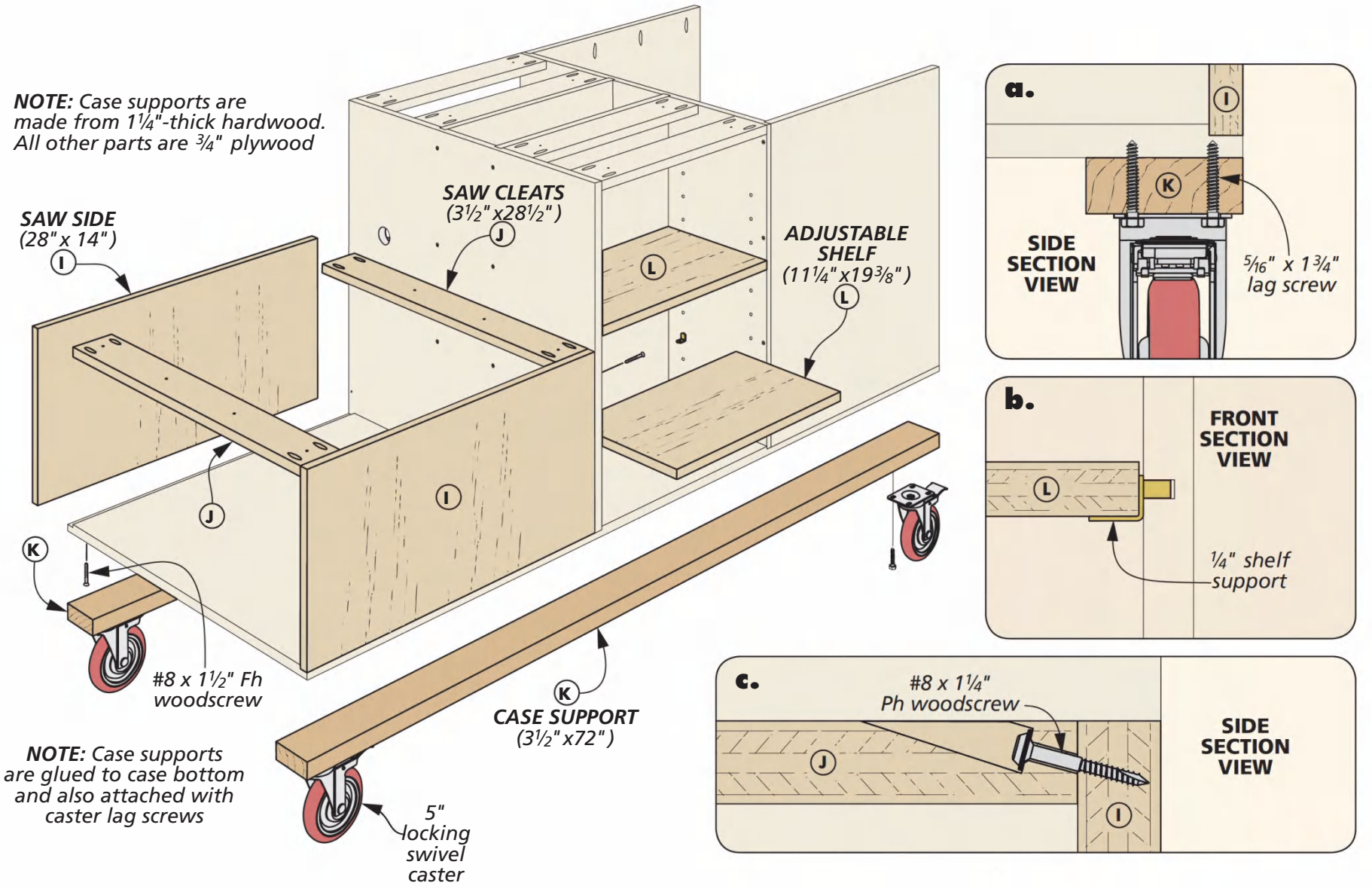

everything close to where you work is a good idea. With that said, there are a few storage options here that will make your work in the shop easier. The first, and easiest, is cutting a pair of shelves for the center section. These rest on shelf supports that you can position where you'd like.

TABLE SAW DRAWER

The drawer on the table saw side of the cart is quite large. However, the joinery is simple tongue and dado joints. The only quirk is the bottom, which I beefed up using thicker plywood to help hold the extra weight of the items that will inevitably get stacked in the deep drawer.

After cutting a groove for the bottom, the bottom will need a little work to slide into place. This is done by cutting a rabbet around the lower edge of the bottom panel at the table saw. Now, the box can be assembled and installed. It's mounted on metal slides (detail 'b'), and the false front is screwed in place.

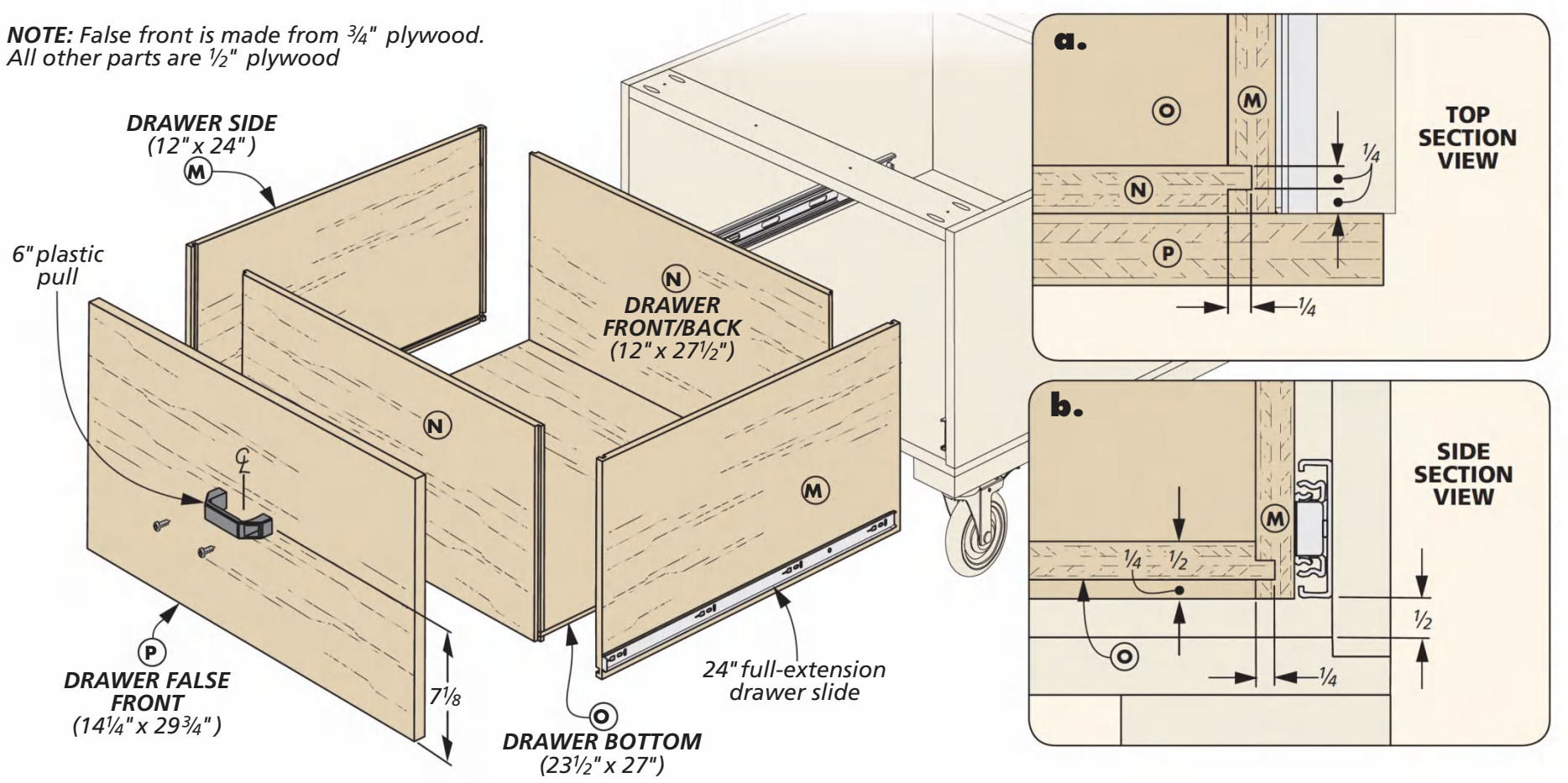

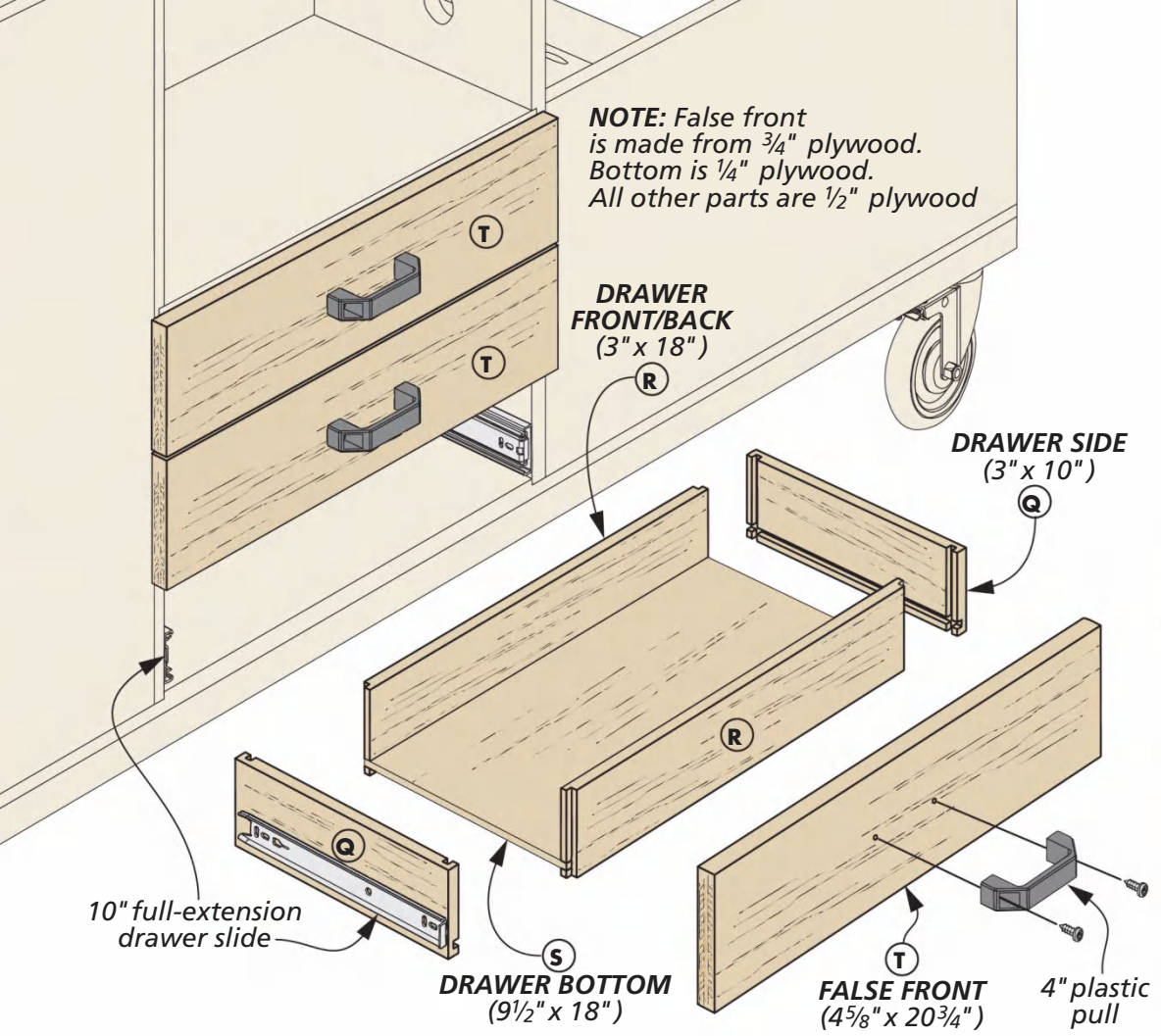

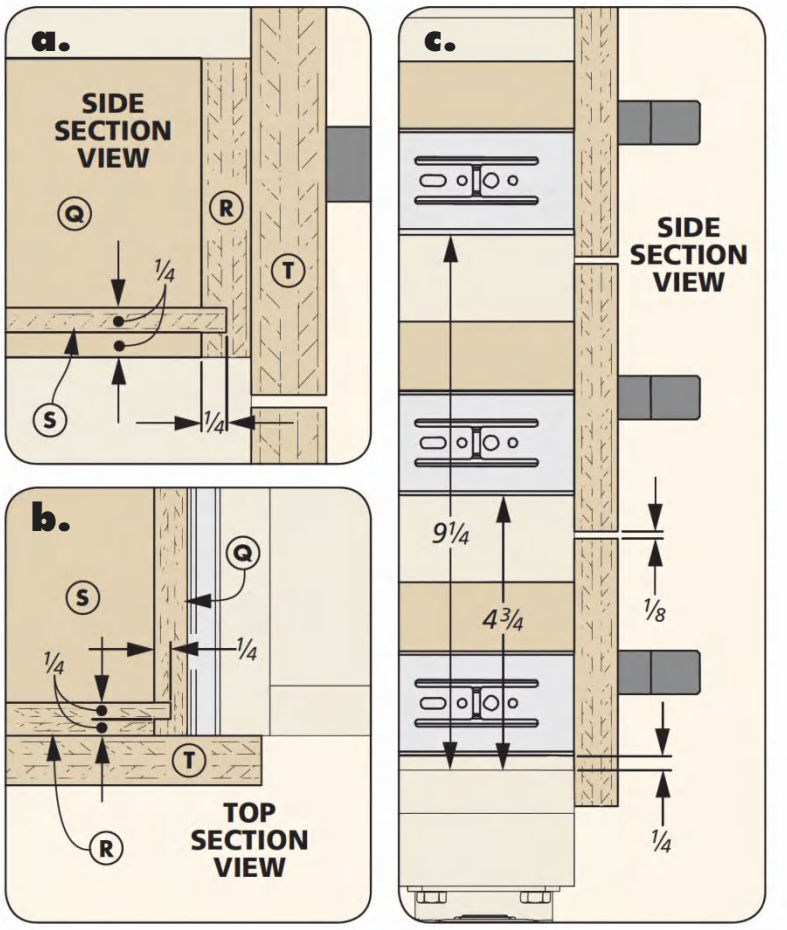

A few more **DRAWERS**

There are a few more drawers to take care of before you switch gears. A series of drawers sits below the router table, and a large, shallow drawer lives under the planer.

A TRIO OF DRAWERS. The three drawers under the router table are up to bat now. These are the perfect size to store router bits, insert rings, wrenches, and all the other accessories you need close at hand while at the router table. The construction of these mimics the joinery used on the table saw drawer.

The front and back of the drawer have a tongue cut on each end. These fit into dadoes that are cut in the sides. Again, a groove is cut around the bottom edge to hold the bottom. Here, I found it helpful to make all the drawer boxes first and install them. Then, you can position the three false fronts for even spacing and attach them with screws before installing the pulls.

PLANER DRAWER. The drawer below the planer cubby is fairly shallow, but is the perfect place for extension cords and other small accessories. It's built using the same construction as the drawers you've already built. All of the joinery is easy to cut at the table saw using a dado blade.

After the drawer is built, install it with slides, as shown in detail 'a' below. The slides are installed flush with the front of the case and slightly off the bottom of the cart. Once you have the drawer in place, position the false front with double-sided tape and attach it with screws. The final thing is to install a plastic pull on the front of the drawer.

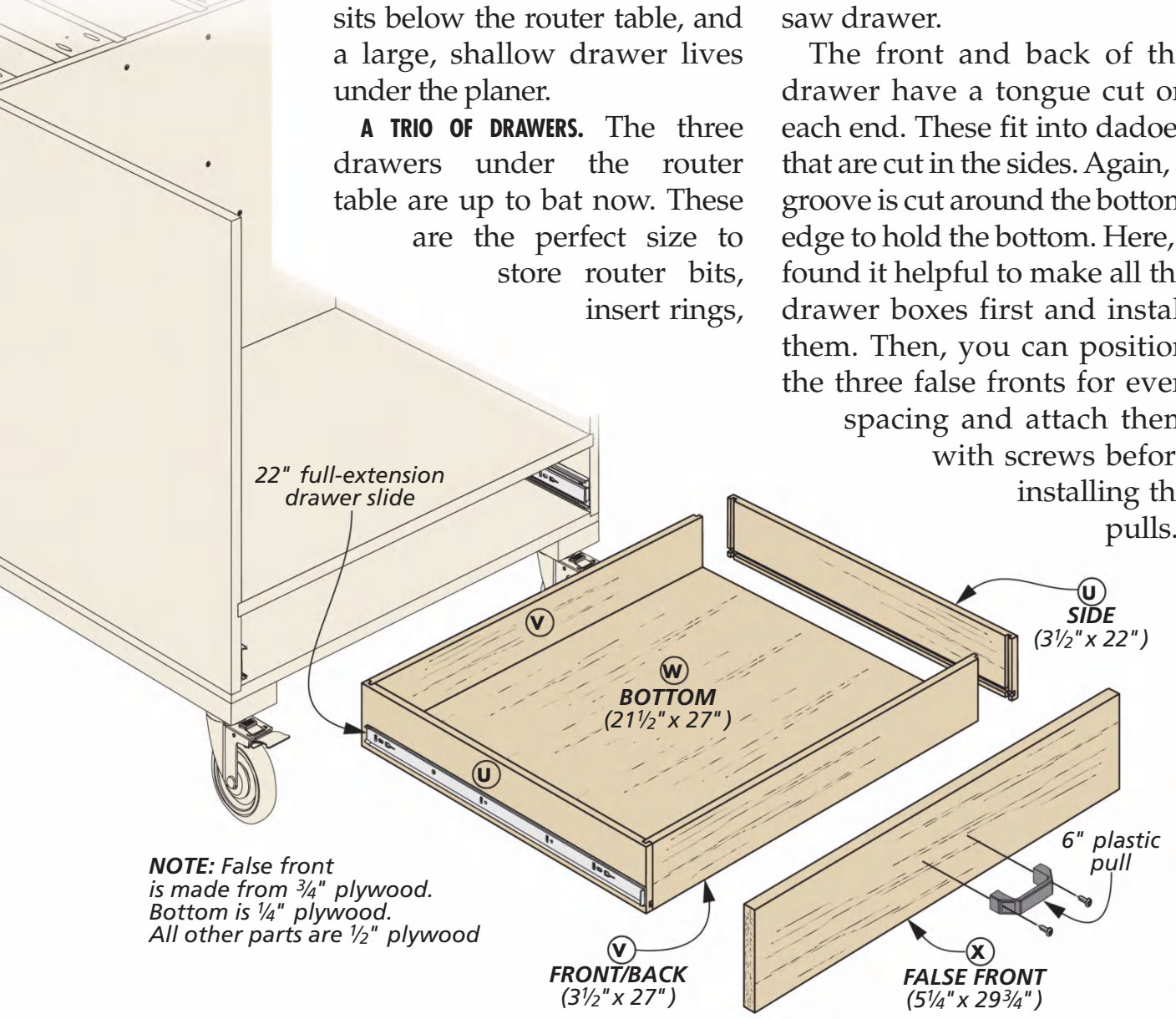

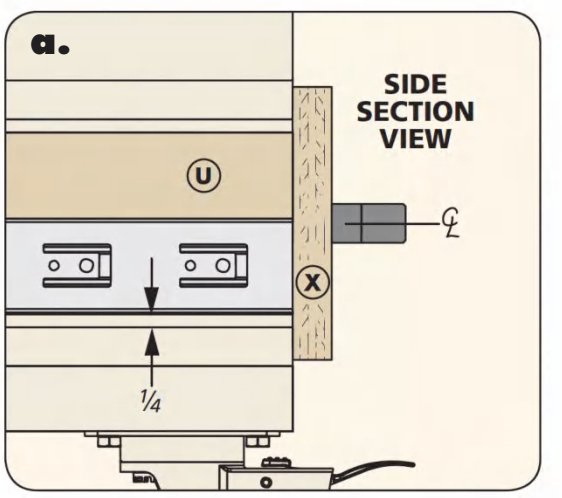

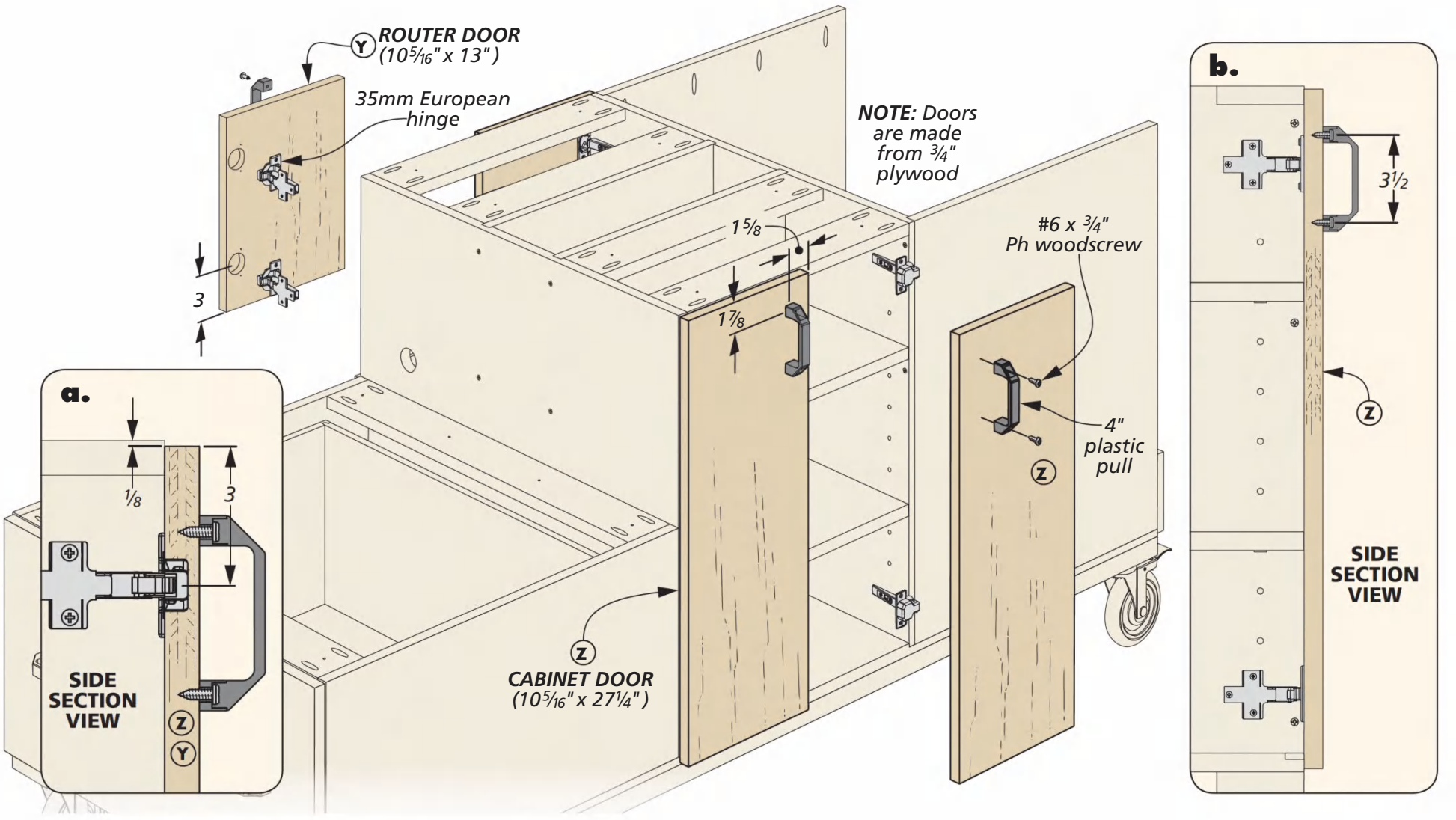

FOUR DOORS

Before starting work on the different worksurfaces, you'll want to wrap up the doors of the workcenter. You'll have a total of four doors to make. Two smaller doors are on the router side of the workcenter and they enclose the router when it's installed. On the opposite side, a pair of tall doors hide the adjustable shelves that you've already installed.

The construction of the doors couldn't be simpler. They're just plywood panels cut to finished size. The only thing that takes a little bit of attention is drilling the recesses for the European hinges used to mount them to the case. Here, a jig is your best bet. It'll help you locate the hinge position so you can accurately install the hinges. You can see how the jig is constructed and how it's used in the box below.

DOOR INSTALLATION. With the hinges installed on the doors, they're ready to mount on the case. I like to position the door and mark the screw locations with an awl and then predrill them. Just pay attention to where you're installing the door, as you don't want it to rub on the top once it's installed. After getting the handles in place on each door, you're ready to start tackling the top of the workcenter.

DOOR HINGE JIG

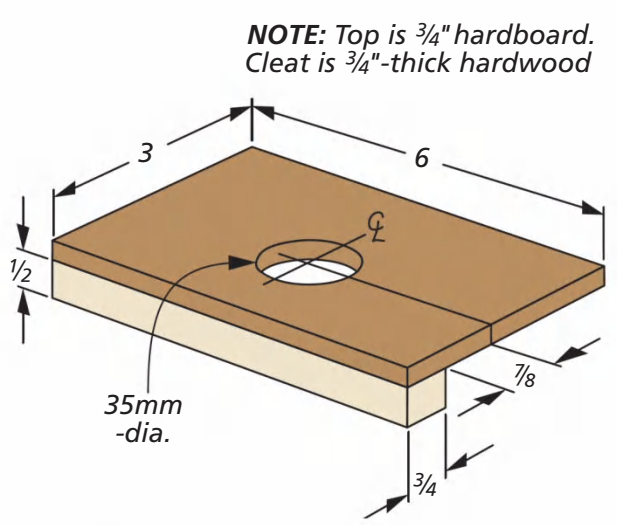

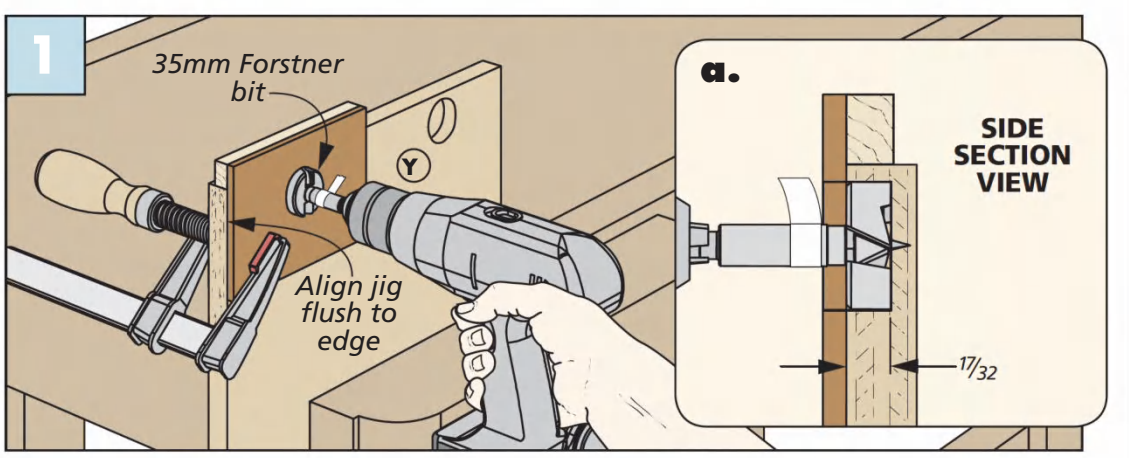

Hinge Pockets. With the door clamped in a vise, position the jig over the hinge location and secure it with a clamp. Then, use a Forstner bit to drill the hinge pockets, using tape on the bit shank as a depth indicator.

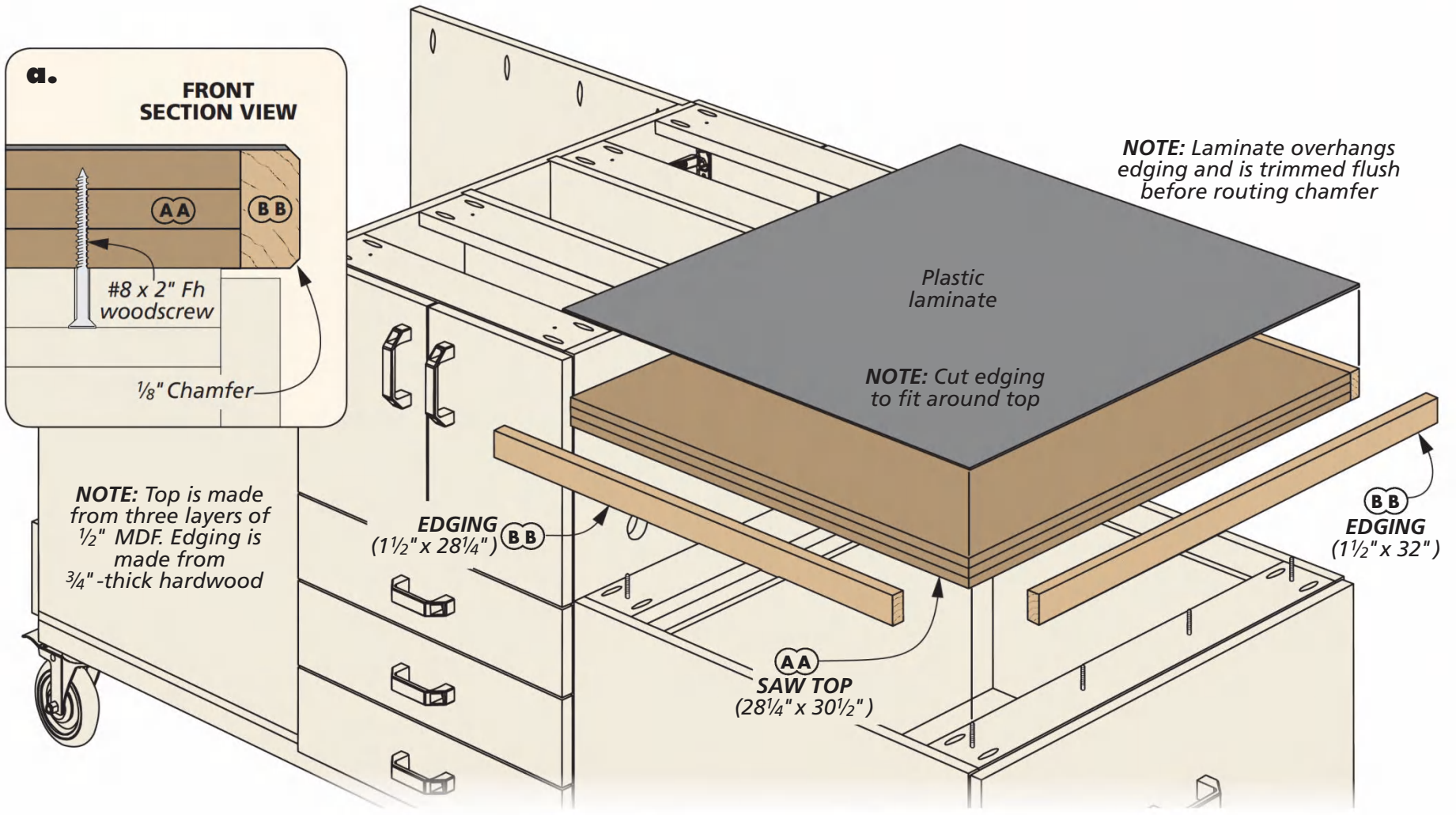

Adding the **FIXED TOP**

The tops for the workcenter can be broken into three sections. The first is the table saw top. Next, is the main top that has the router plate installed. Finally, there's the portion of the top that holds the planer and rotates to reveal an additional worksurface. Up first is making the table saw top.

MDF LAYERS. I used three layers of MDF glued together to form a sturdy platform. After gluing the layers together, I cut it to size using a circular saw, due to the weight. Then, I installed some hardwood edging around the three exposed edges (see main drawing).

Before installing the top, I used spray adhesive to attach a piece of plastic laminate and chamfered the edge with a router. The top can be installed with screws through the cleats (detail 'a').

MAIN & FLIP-TOP. The next two tops are the main top and the flip top. These are glued up as one assembly and are then cut apart. Before slapping some MDF together, take a look at the drawings to the right on the next page. To create the pivot point for the rotating top, you'll want to cut the middle layer into two pieces. This creates a channel through the top that the pivot rod can be installed in. I simply

SLIDING BOLT DETAILS

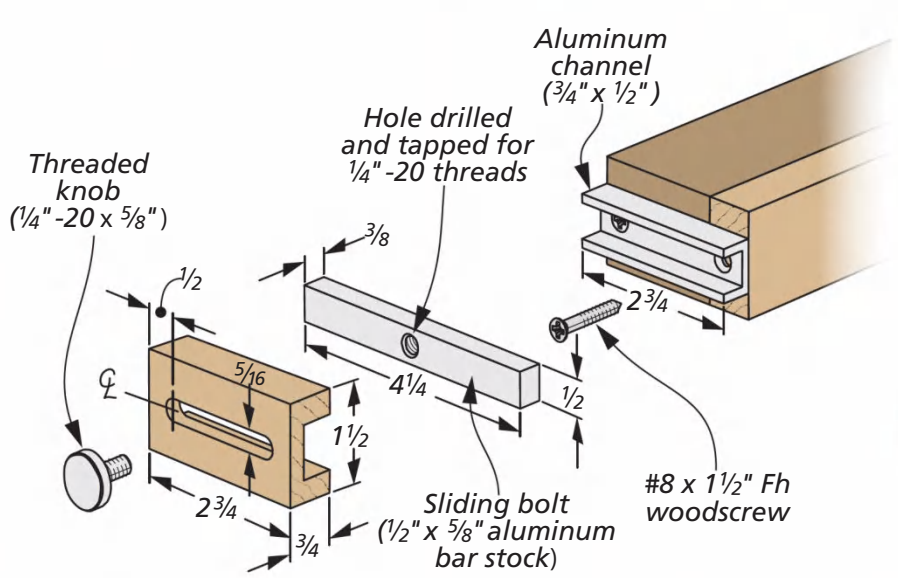

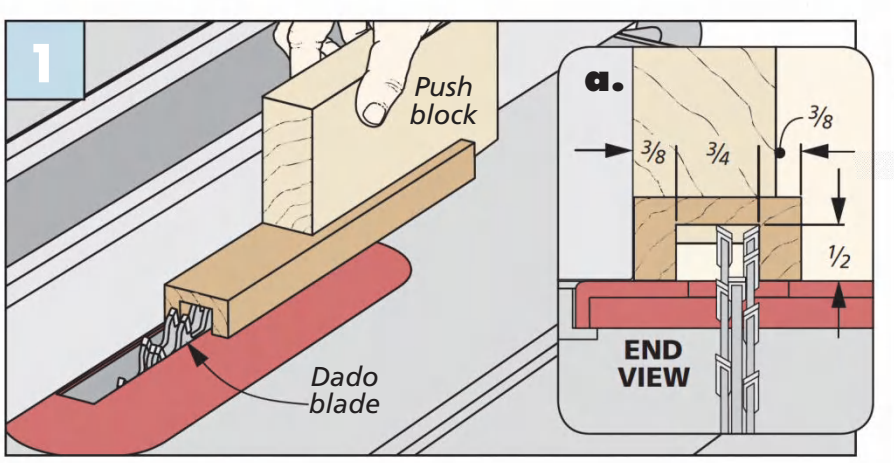

Edging Grooves. At the table saw, use a dado blade to cut a wide groove on the inside of a long piece of edging. After the dado is cut, you can rout the through slot.

▲ The sliding bolt rides in aluminum channel. By sliding it in place, it locks the top in both positions.

used the rod as a spacer while gluing the top together and removed it after the glue dried.

CUT IT APART. After the glue is dry, you can split the top into the two different sections, but first edge the three sides as shown at right. Then, use a jig saw with a straightedge guide to cut the flip section loose. The back edge of the flip section will get trimmed down a little bit, so you can drill a couple holes in the corners to help you make the turn with the saw. Once you have the flip top free, set it off to the side for now.

GROOVY EDGING. Now you can add the remaining edging to the top. This edging is grooved to receive the latch mechanism that locks the flip-top in place. I cut this groove with a dado blade, and then used the router table with a straight bit to cut a through slot into the edging.

Before cutting the edging apart and installing it, make the sliding bolt mechanism and install it. The box on the previous page shows how to make the bolt. The channel is screwed to the top, and the bolt slides into the channel. A knob is threaded into the bar through the slot in the edging. To finish the top, add laminate with spray adhesive.

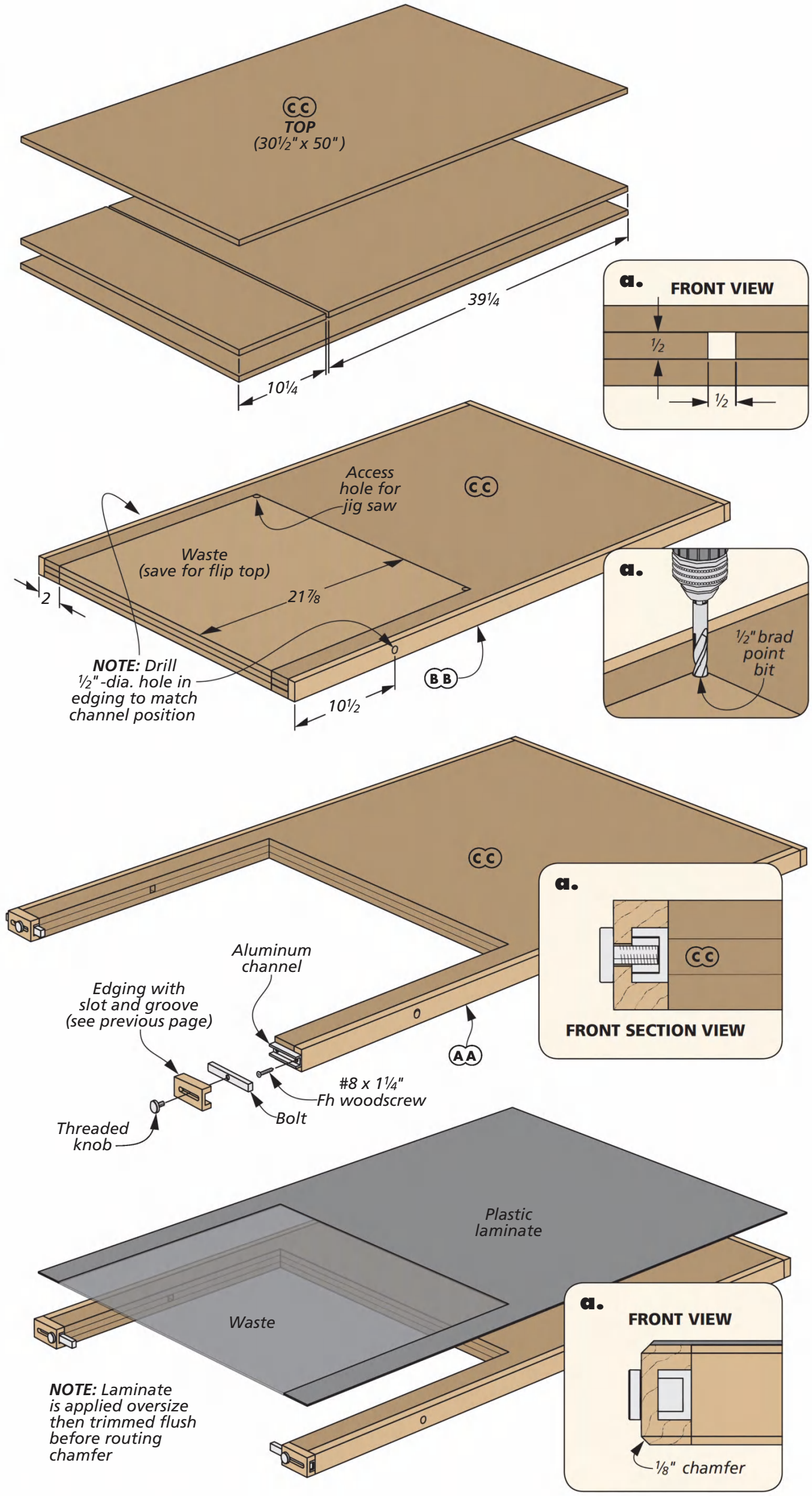

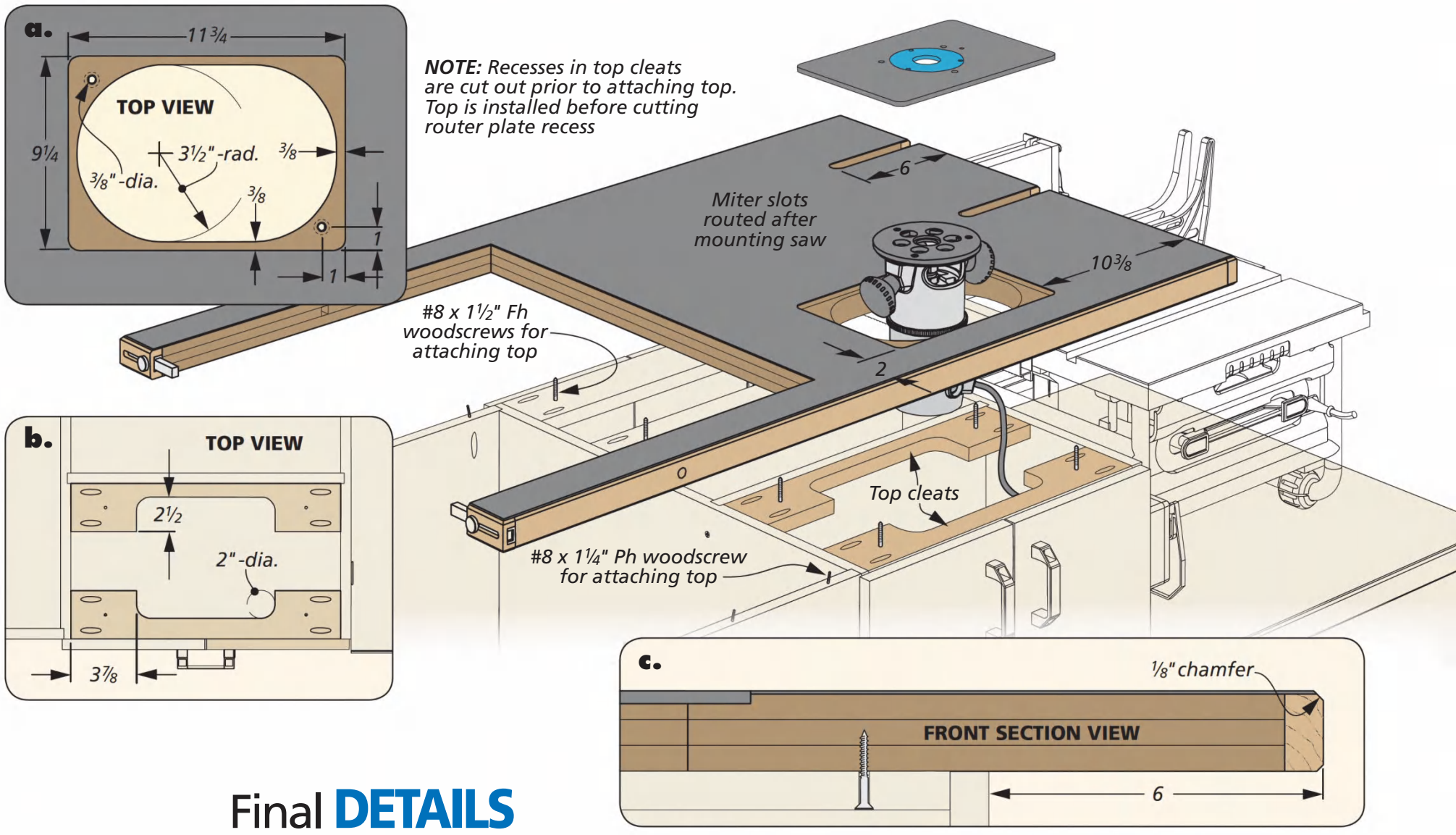

Final **DETAILS**

At this point, you can install the main top onto the workcenter. There are just a few more details to take care of before you start putting it to use though.

ROUTER INSERT. With the top installed, I positioned the router plate and marked the location (detail 'd'). Then, it was a simple matter of using a jig saw to cut the main opening for the router. But first, you'll have to size the top cleats (detail 'b'). Finally, you can use a couple of fences and a dado cleanout bit to form the rabbet for the router plate.

ROUTER FENCE. The fence for the router table is next. It consists of a base, face, and a pair of brackets. After cutting the face and base to size, I cut the notches with a jig saw.

While I had my jig saw in hand, I used it to form the slots in the base — I simply cut between two holes I had drilled to form the ends. Then, after cutting the brace angles with a jig saw, I assembled the fence with glue and screws.

To attach the fence to the table, I drilled holes in three different locations in the top and installed threaded inserts into them. That way, I could use studded knobs to attach the fence to the top.

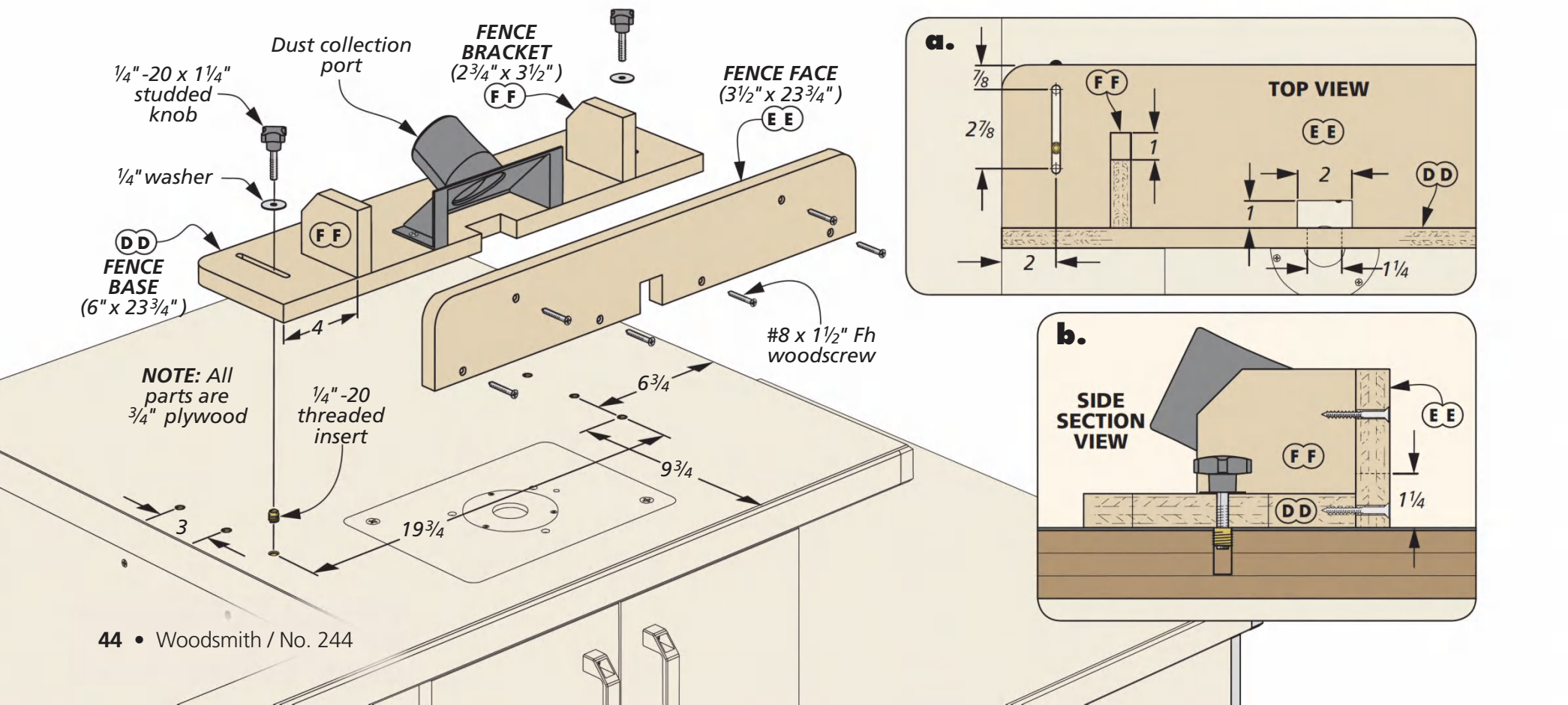

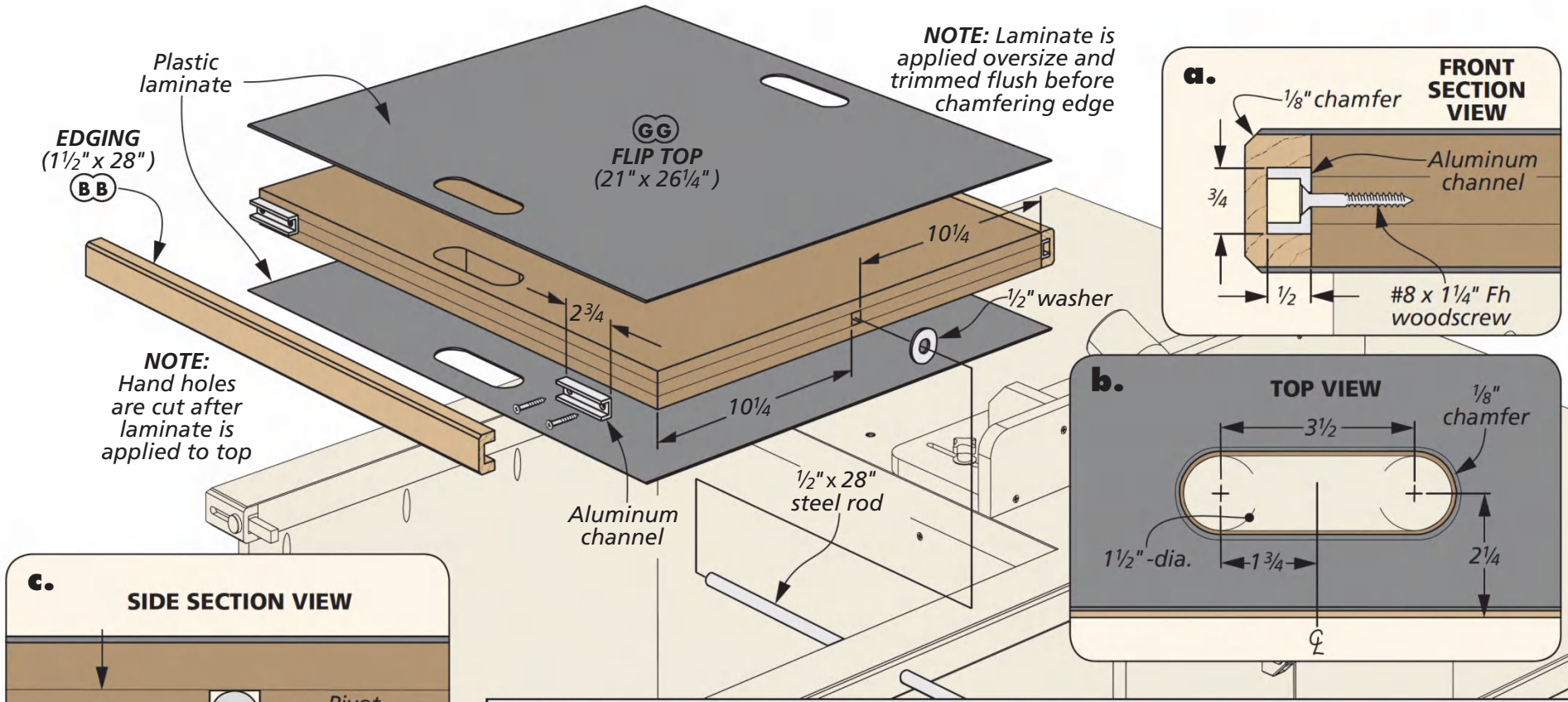

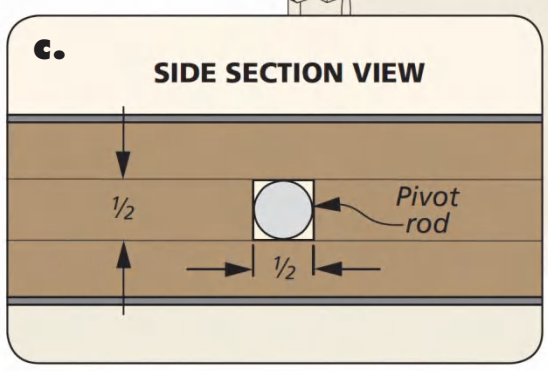

FINISH THE FLIP-TOP. Now you're ready to finish the flip-top that you set aside earlier. The first thing to do is trim the top down to final dimensions and make a little more edging with a groove in it. After attaching some aluminum channel to the outside edges (main drawing and detail 'a,' above), the edging can be installed.

After mounting laminate on both sides of the flip top and routing the chamfers, the final thing to do is cut a pair of hand holes. Define the ends with a Forstner bit, then remove the waste with a jig saw. Then, you can install the top by sliding in the pivot rod with a pair of washers and plugging the holes with a dowel.

With the top finished, the workcenter is ready to punch the time clock. Now of course, you'll have to mount your tools. We designed the flip top for a planer, but any tool that you want to store out of the way would be the perfect candidate to install there. However you utilize the flip top, this workstation is the perfect space-saving solution for your shop. W

Materials, Supplies & Cutting Diagram

A	Base (1)	¾ ply. - 30 x 72
B	Planer Back (1)	¾ ply. - 30 x 27
C	Saw Back (1)	¾ ply. - 30 x 27
D	Case Dividers (2)	¾ ply. - 20 x 27
E	Router Shelf (1)	¾ ply. - 11½ x 20
F	Planer Sides (2)	¾ ply. - 23¼ x 27
G	Planer Shelf (1)	¾ ply. - 23¼ x 29
H	Top Cleats (4)	¾ ply. - 3½ x 19½
I	Saw Sides (2)	¾ ply. - 28 x 14
J	Saw Cleats (2)	¾ ply. - 3½ x 28½
K	Case Supports (2)	1¼ x 3½ - 72
L	Adjustible Shelves (2)	¾ ply. - 11¼ x 19⅜
M	Saw Drawer Side (2)	½ ply. - 12 x 24
N	Saw Dwr. Frt/Bk (2)	½ ply. - 12 x 27½
O	Saw Dwr. Bottom (1)	½ ply. - 23½ x 27
P	Saw Dwr. False Fr. (1)	¾ ply. - 14¼ x 29¾
Q	Router Dwr. Sides (6)	½ ply. - 3½ x 10
R	Router Dwr. Frt/Bk (6)	½ ply. - 3 x 18
S	Router Dwr. Bottom (3)	¼ ply. - 9½ x 18
T	Router Dwr. False Fr. (3)	¾ ply. - 4⅝ x 20¾
U	Planer Dwr. Sides (2)	½ ply. - 3½ x 22
V	Planer Dwr. Frt/Bk (2)	½ ply. - 3½ x 27
W	Planer Dwr. Btm. (1)	¼ ply. - 21½ x 27
X	Planer Dwr. False Fr. (1)	¾ ply. - 5¼ x 29¾
Y	Router Doors (2)	¾ ply. - 10 5/16 x 13
Z	Cabinet Doors (2)	¾ ply. - 10 5/16 x 27¼
AA	Saw Top (1)	1½ MDF - 28¼ x 30½
BB	Edging	¾ x 1½ - 278 rgh.
CC	Top (1)	1½ MDF - 30½ x 50
DD	Fence Base (1)	¾ ply. - 6 x 23¾
EE	Fence Face (1)	¾ ply. - 3½ x 23¾
FF	Fence Brackets (2)	¾ ply. - 2¾ x 3½
GG	Flip-Top (1)	1½ MDF - 21 x 26¼

- (1) ½"-dia. x 36" Steel Rod
- (4) 5" Casters
- (16) 5/16" x 1¾" Lag Screws
- (2) 48" x 96" Plastic Laminate
- (66) #8 x 1½" Fh Woodscrews
- (7) 4" Plastic Handles
- (2) 6" Plastic Handles
- (1) Router Insert Plate
- (6) ¼"-20 x 1¼" Threaded Inserts
- (2) ¼"-20 Studded Knobs
- (1) Dust Collection Port
- (3 pr.) 10" Full-Extension Drawer Slides
- (1 pr.) 22" Full-Extension Drawer Slides
- (1 pr.) 24" Full-Extension Drawer Slides
- (1) ½" x ¾"-12" Aluminum Channel
- (1) ½" x ⅜"-10" Aluminum Bar Stock
- (2) ¼"-20 Threaded Knobs
- (8) 35mm European Hinges
- (8) Shelf Supports
- (18) #12 x ¾" Ph woodscrews
- (2) ½" Washers
- (2) ¼" Washers

Also needed:
Three 48" x 96" sheets of ¾" Baltic birch plywood
One 48" x 96" sheet of ½" Baltic birch plywood
One 48" x 96" sheet of ¼" Baltic birch plywood
Three 49" x 97" sheets of ½" MDF

¾" x 5" - 96" Hard Maple (3.3 Bd. Ft.)

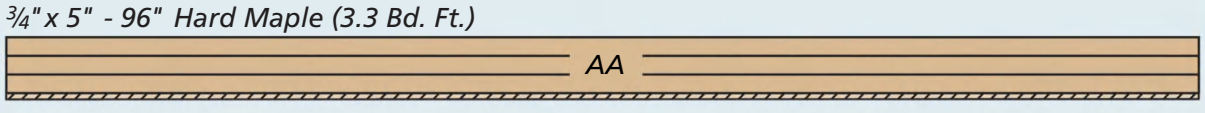

1¼" x 7½" - 72" Hard Maple (2.2 Bd. Ft.)

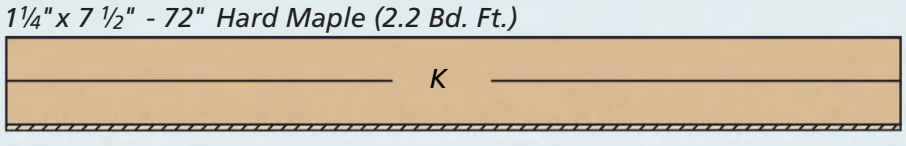

Infant Cradle

Skip the treetop. The gentle, rock-a-bye swing of this cradle is sure to keep a little one slumbering peacefully through the night.

We keep a running list of project possibilities. In addition to staff suggestions, the list includes reader requests. Based on that, this heirloom-quality cradle is going to satisfy quite a number of people.

It's what I call a generational project. Shortly after learning of an upcoming birth, a woodworking grandparent (usually) starts thinking about building something special. When the little one comes home, there's a hand-made gift waiting. After serving its purpose, the cradle can be passed along to another family member or treasured until the next baby. In time, the original occupants may use the same cradle for their own children — continuing the tradition.

Understandably, most of the attention will be on the baby inside, but the cradle should still look the part. This one is made primarily from beech with its understated grain and mellow tones. The cherry panels along the sides add a pleasing contrast that will only improve with over time.

Considering that you may not have a lot of time to get this project completed, all the parts are assembled with router-cut, loose tenon joinery. And the process is pretty straightforward.

▲ Custom-made brass pins slip through the legs and into the ends to keep the cradle from rocking. The caps are turned on the drill press.

Written by Phil Huber: Project Design: Dillon Baker

▲ The cradle swings on a pair of matching pivot pins. A keyhole in each end of the cradle slips over the pins for a secure connection.

Illustrated by: Dirk Ver Steeg

Solid-wood **ENDS**

It's a bit of a chicken and egg dilemma whether to construct the stand or the cradle first. I settled on making the cradle first if for no other reason than to see the project take shape a little quicker.

GLUED UP PANELS. The two end panels that you need are pretty large (upper drawing), so they'll require gluing up from several narrower boards. Go for the best look and keep an eye on the joint lines to make them as seamless as possible. This is where I appreciate beech so much. The grain patterns are subdued and easy to match up.

Another nice feature of the wood is how pleasant it is to work with. From running it through a jointer and planer to hand planing and sanding, beech responds well without burning or tearing out.

LOOSE TENON JOINERY. Smoothing the panels and cutting them to overall size opens the door to a little joinery work. The joinery approach here is for loose tenons. What I like about this is the simplicity. You cut matching mortises in the mating pieces. Then, a custom-made loose tenon is glued into the mortises to secure the connection.

While the end blanks are still square, you can rout a set of mortises along each edge of the ends. (The unshaped blank provides better support for the router.) The box on the opposite page has the details for creating a routing template to ensure accurately sized and spaced mortises.

Throughout the project, you'll use the same technique. The only difference is that the length of the mortises will vary to suit the size of the parts. A plunge router makes this system work best.

Take care to align the template accurately so that the line

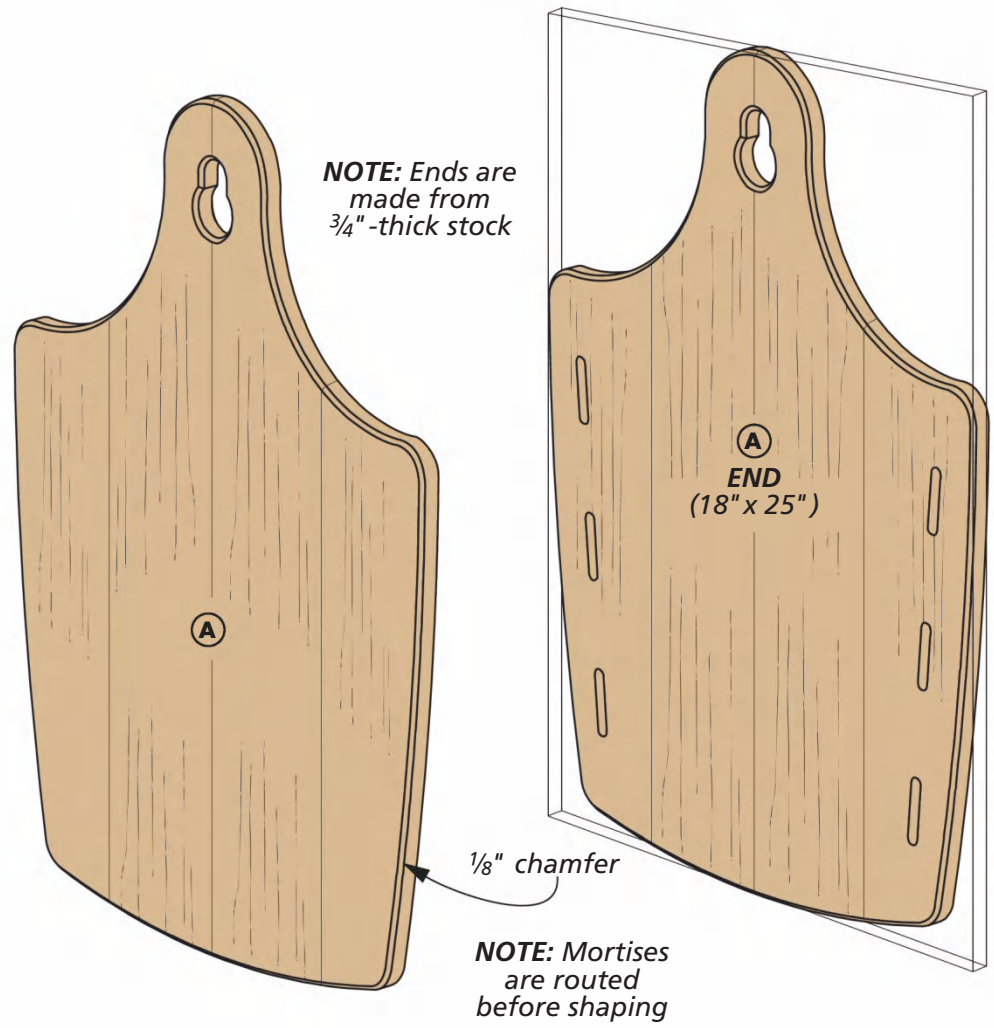

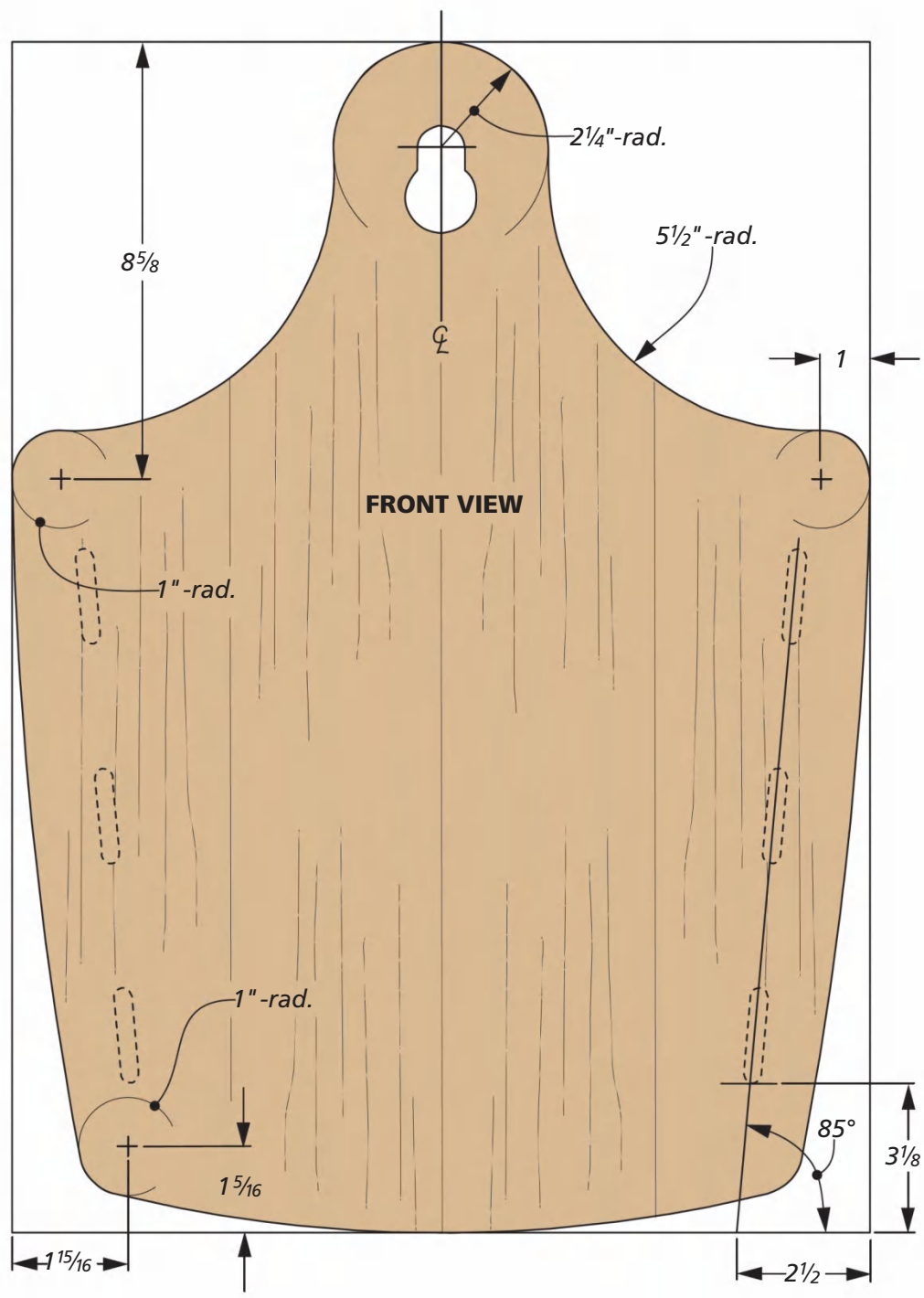

of mortises runs at a slight angle along the edge. I found that marking a centerline on the template and on the blank helped.

LAYING OUT THE FINAL SHAPE. The lower drawing on the previous page provides the road map for shaping the ends. How you travel it is a little up to you. One option is to lay out the details on one of the blanks. You can shape that one, then use it as a pattern for shaping its twin.

However, if you think there are other cradles in your future, I recommend creating a template using hardboard or MDF. The template can then be used for layout and flush-trimming accurate ends time after time.

Once the layout is complete, step over to the band saw to cut out the profile. (Let me just say that if you don't have a band saw, you can use a jig saw for this cradle, just as well.)

The saw marks need to be smoothed out and the curves blended. For me, this is handwork using a spokeshave, files, and sanding blocks.

KEYHOLE. At the top of the end, you'll notice an upside-down keyhole. This is used to connect the cradle to the stand. Figures 1 and 2 in the box below walk you through that process.

The work on the ends wraps up with a slight chamfer around all the edges — don't forget the keyhole. In fact, this chamfer details shows up a lot. So if you have a second router, keep the chamfer bit ready for action.

MORTISE TEMPLATE

Routing Mortises. You'll make a few routing templates in the course of building the cradle. The one for the ends is shown here. All the templates are designed to work with a ½" outside diameter guide bushing and a ⅜" straight bit. It's good practice to rout mortises in steps, lowering the bit with each pass. This puts less stress on the router and gives you smooth, consistent mortises.

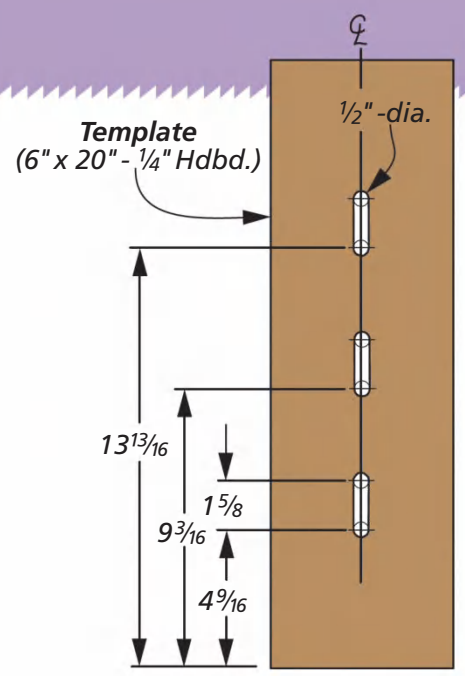

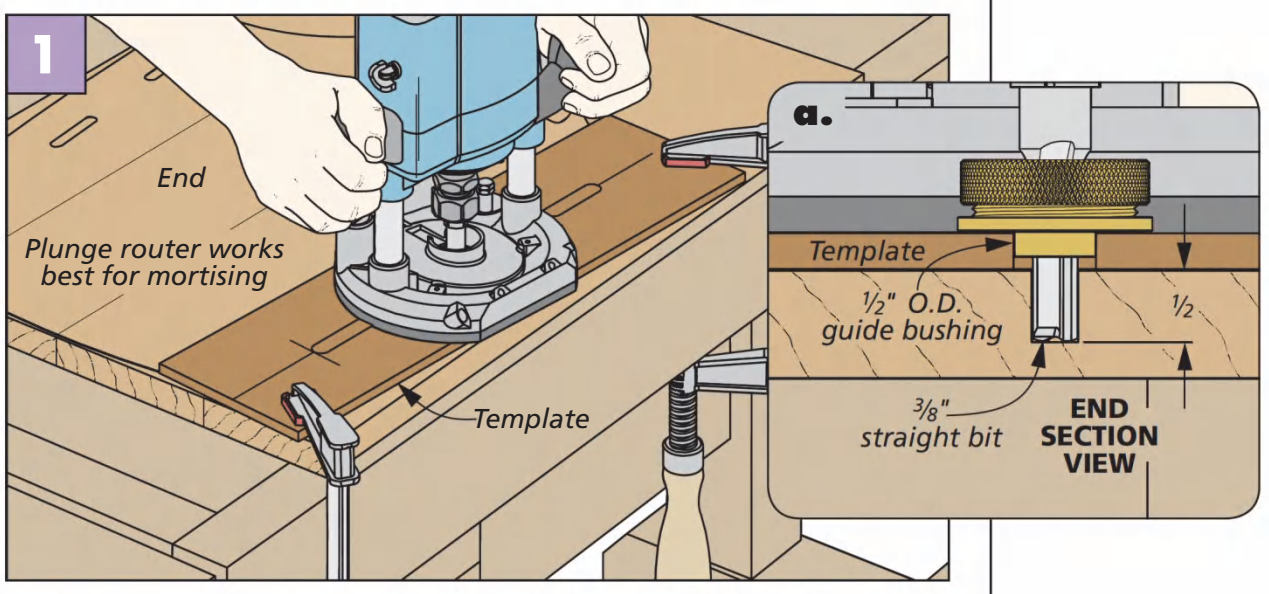

SHAPING AN INVERTED KEYHOLE

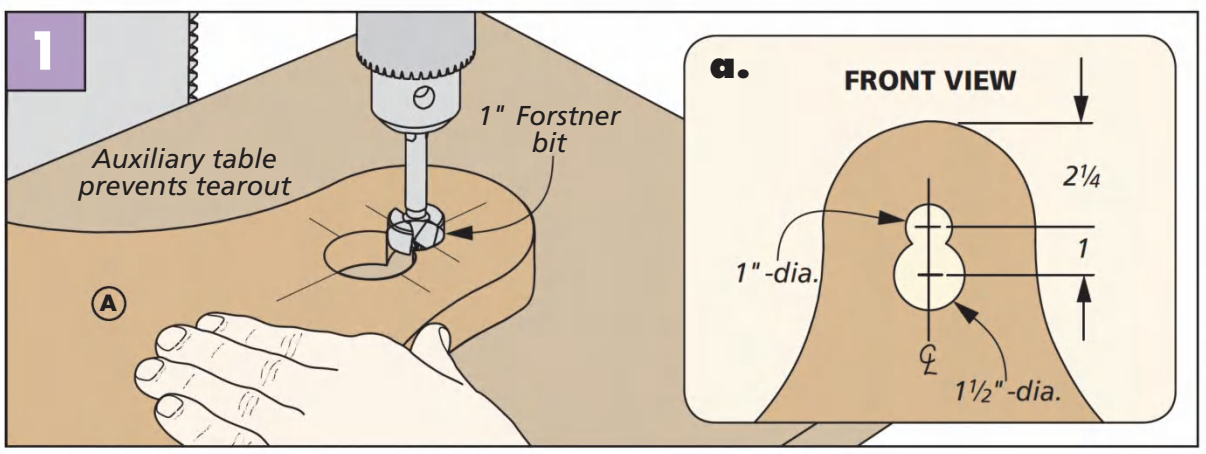

Drill First. The keyhole at the top of each end is really just a pair of intersecting holes. For curved edges, drilling the shape rather than cutting gives you better results. Forstner bits work well here since they aren't likely to drift into the adjoining hole.

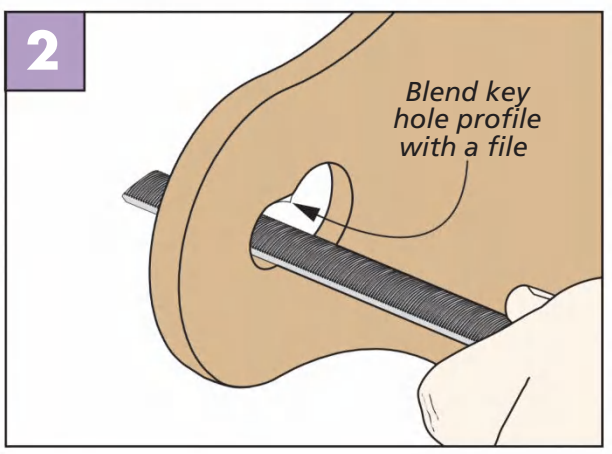

Now Blend. A half-round file is just the right shape to transition from the curve to the straight sides of the hole smoothly.

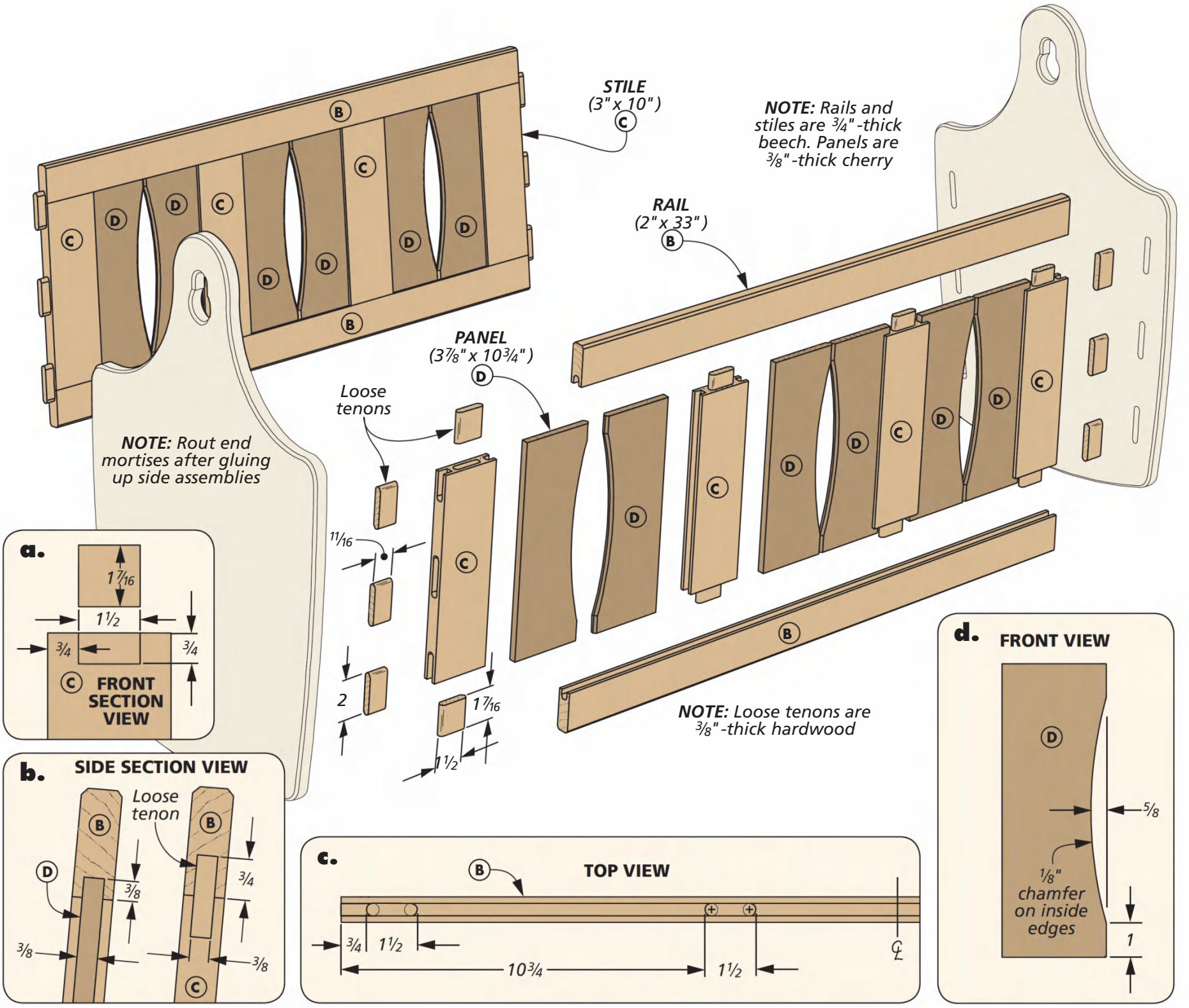

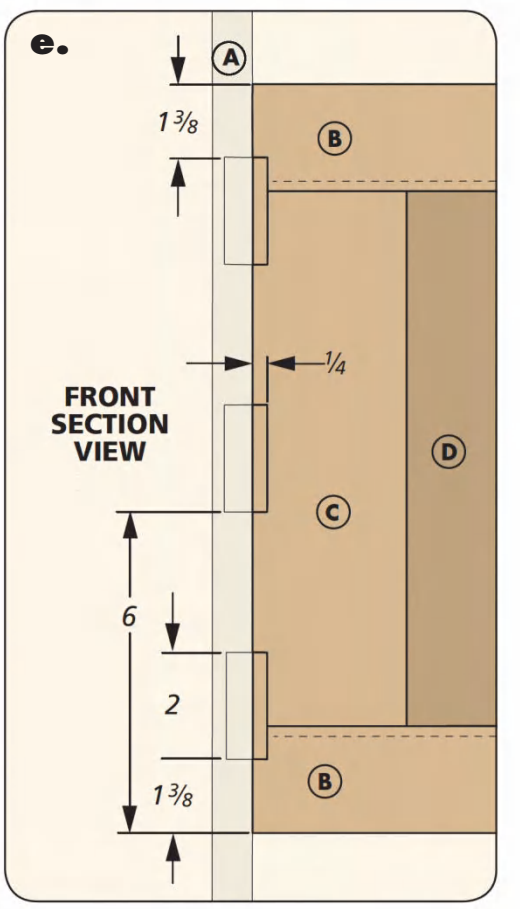

Frame & panel **SIDES**

The frame and panel side assemblies shown above are more involved than the solid ends. However, you'll find that they build on the work (and skills) you've already completed.

In one sense, the work here is a little easier. The rails and stiles are straight, square parts, as shown in the drawing above.

The inside edges of these parts have a groove to house the unique panels, as in details 'b' and 'c.' You can cut these grooves at the table saw with a dado blade. Or since the grooves match the mortises, you can cut them with the same router bit you use for the mortises.

MORE MORTISES. Continuing our theme, the rails and stiles are joined with loose tenons. The box on the top of the next page shows the jig you'll need for this step. This jig is used in a slightly different way. A pair of hardwood fences centered on the slot straddle the workpiece to locate the mortise consistently. Details 'a' and 'c' help you position the jig on the stiles and rails.

TWO-PART PANELS. Before you tackle any assembly, you'll need to create the panels. Rather than

MORTISE JIG FOR RAILS & STILES

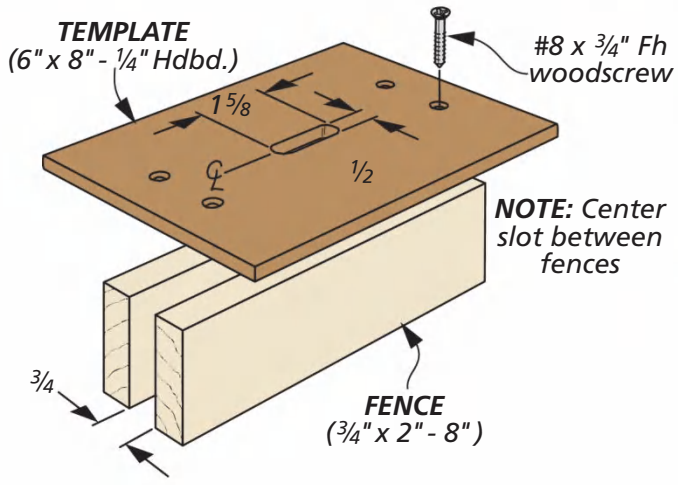

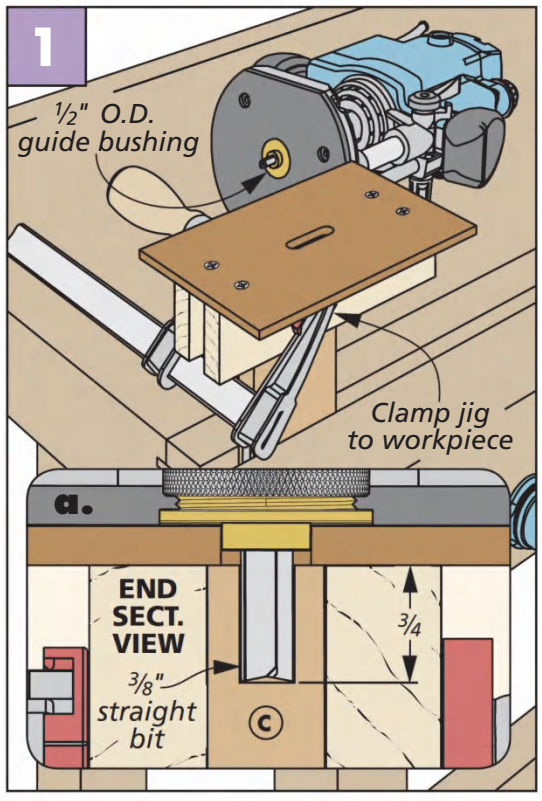

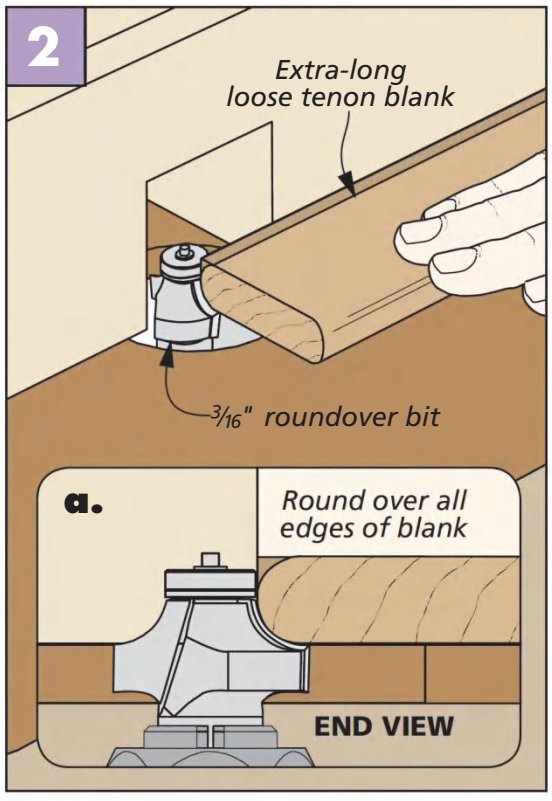

Jig & Tenons. The template required for joining the side assemblies is smaller than the first one. The fences attached to the template trap the workpiece in place for consistent placement (Figure 1). When making the loose tenon blanks, round the edges to match the ends of the radius of the mortises.

a typical solid panel, these are made in two halves (detail 'd' on the previous page). They're planed to match the width of the grooves in the stiles and rails. The mating, inner edge of each panel piece is curved to create small openings.

With as many panels as you need, making a template can speed the shaping process. The inside edge of each panel is also chamfered. Solid wood panels like these aren't glued in place to allow them to expand and contract with seasonal humidity. However, to prevent a gap from randomly appearing between the two panels, I spot glued them together at the ends.

MAKING TENONS. You're ready for some assembly. All you need are the loose tenons. I resawed and planed oversize blanks to match the mortise width — aim for an easy press fit.

From here, rip the blanks to match the length of the various mortises throughout the project. Since the ends of the mortises are rounded, round over the edges (Figure 2 above). Cut the tenons a little short so the they won't bottom out and prevent the joint from closing.

JOIN THE ENDS. Once glued up, you can form mortises on each end of the side assemblies and join them to the cradle ends. You'll use the same template and add fences to locate the mortises, as in the box below.

CRADLE SIDE MORTISE JIG

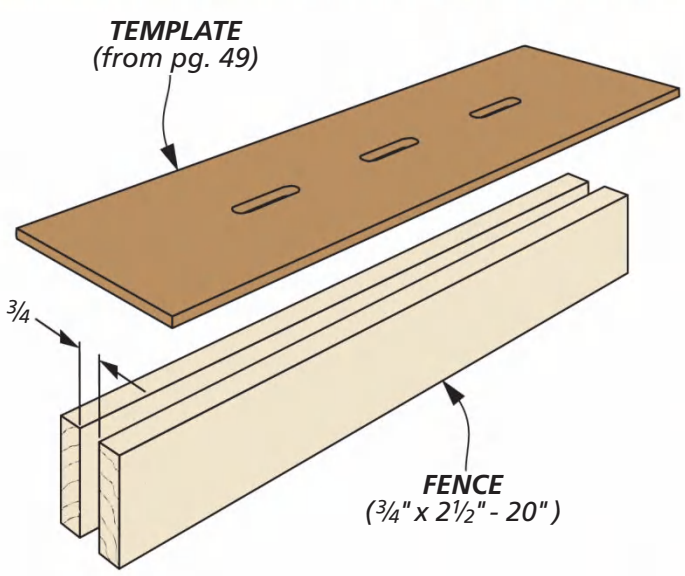

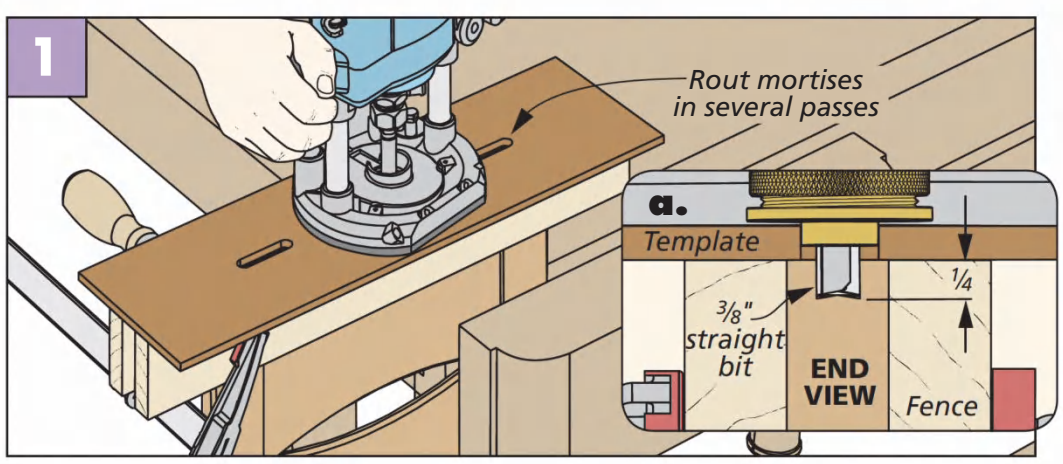

Matching Mortises. Attach a pair of fences to the cradle end template to rout mortises in the ends of the side assemblies.

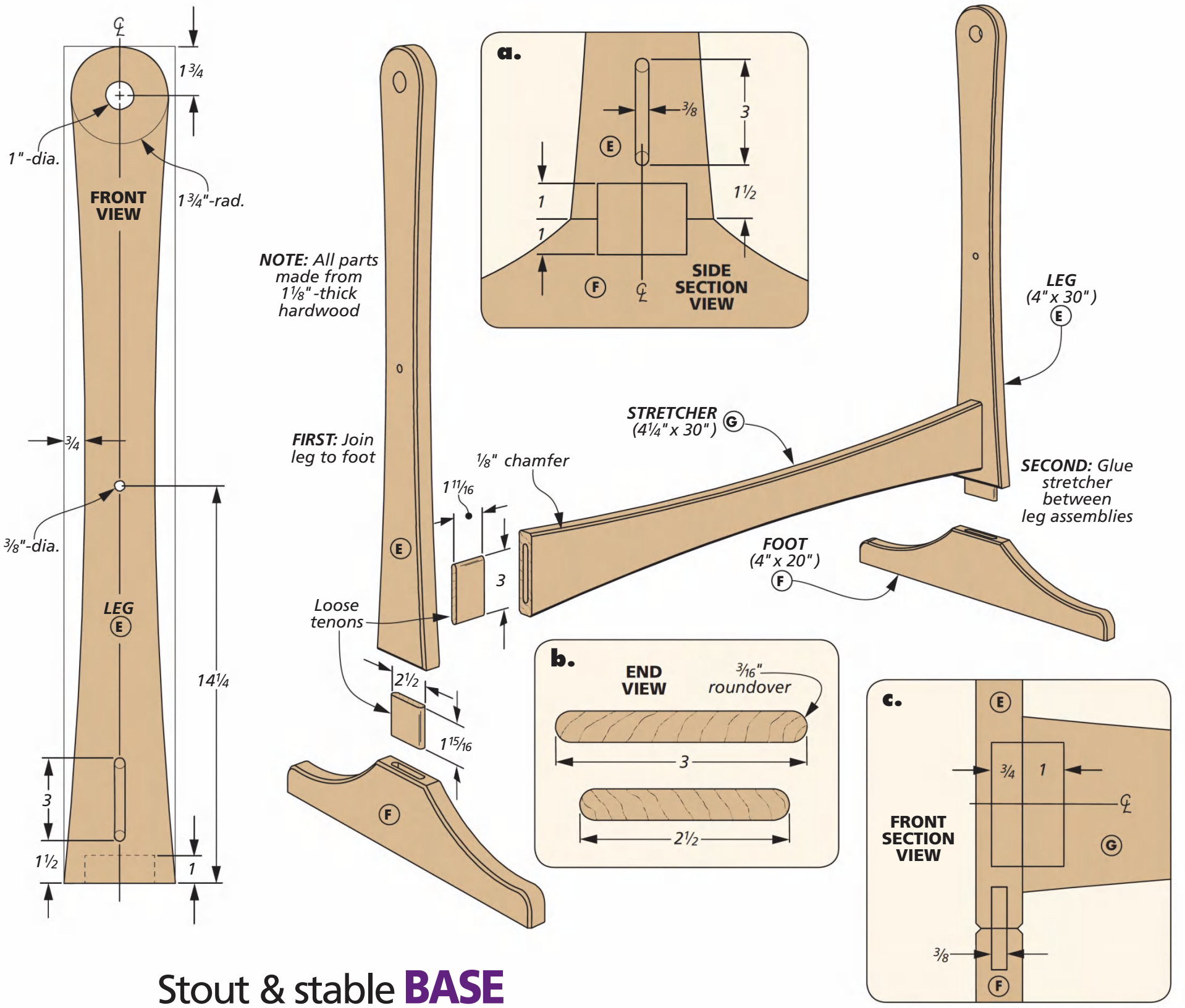

Stout & stable **BASE**

There are a few details left to take care of on the cradle, but you can hold off on that for now. It's time to make the other major part of the project — the base. This portion creates a pivot point for the cradle and raises it up to a more comfortable height.

The base consists of a pair of leg/foot assemblies joined by a stretcher — pretty simple. Keeping up with the theme, you'll spend quality time with your band saw and router to create the parts and join them together.

LEG. The legs come first. Cut these to shape using the front view in the left margin above. (Here's another opportunity to make a template if you plan to build more cradles.)

After cleaning up the edges, rout a chamfer all around. Don't forget the bottom edges as this will create a nice shadow line where the leg meets the feet, as shown in detail 'c.'

There's also a pair of holes to drill. One is near the top for the pivot pin. Then another about midway up the leg holds a stop pin that keeps the cradle still.

MORE MORTISES. Joinery on the legs consists of routing a pair of mortises. One on the inside face connects to the stretcher, as shown in detail 'a.' The other is used to attach the foot. The box on the next page shows the template details you need.

Figure 1 shows the setup for routing the mortise on the face. The key is centering the template on the leg. Also, note the depth of the mortise so you don't accidentally plunge completely through the leg (detail 'c').

For the mortise cut into the bottom of the leg, you'll need a slightly different-sized slot. And you'll need to attach this template to a pair of fences to position the template correctly on the leg, as you can see in Figure 2 on the next page.

MAKE THE FEET. With the legs complete, you can shape the feet in

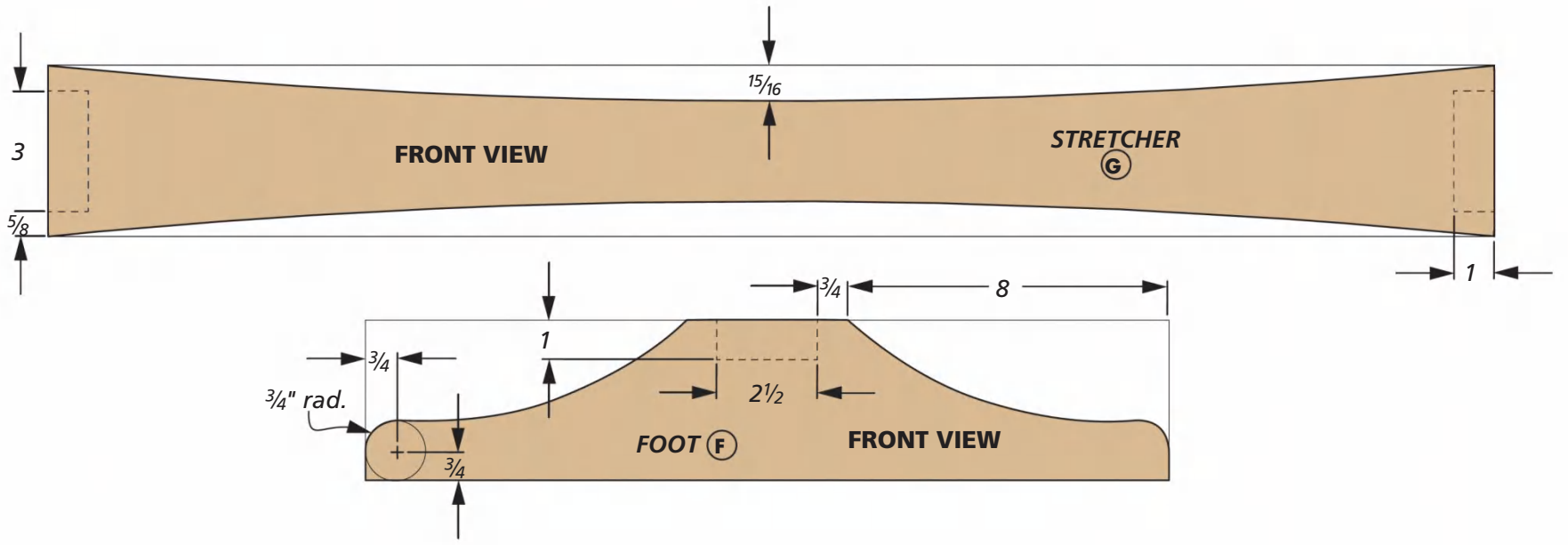

the same way that you made the legs. The drawings above show the important dimensions. The feet have a chamfer routed on all the upper edges. Then you can use the template with the fences to rout a mortise in the top of the foot.

At this point, you can join the legs and feet with loose tenons. The dimensions for these are shown in detail 'b' on the previous page. Go easy on the glue to avoid a lot of squeezeout that can be tough to remove in the small chamfered area.

LONG STRETCHER. The stretcher spans the leg assemblies and sits just below the cradle. The stretcher features curves cut into the upper and lower edges to complement the curves on the legs and feet, as in the drawing above. These edges receive the same chamfer detail (main drawing on the previous page).

By now, you should have an idea of what comes next — mortising. Using the template from routing the face of the legs, attach fences and rout a mortise in each end of the stretcher. Then you can cut a pair of loose tenons to fit. Finally, glue and clamp the stretcher in place. Your focus here is keeping the legs parallel.

3-IN-1 SADDLE JIG

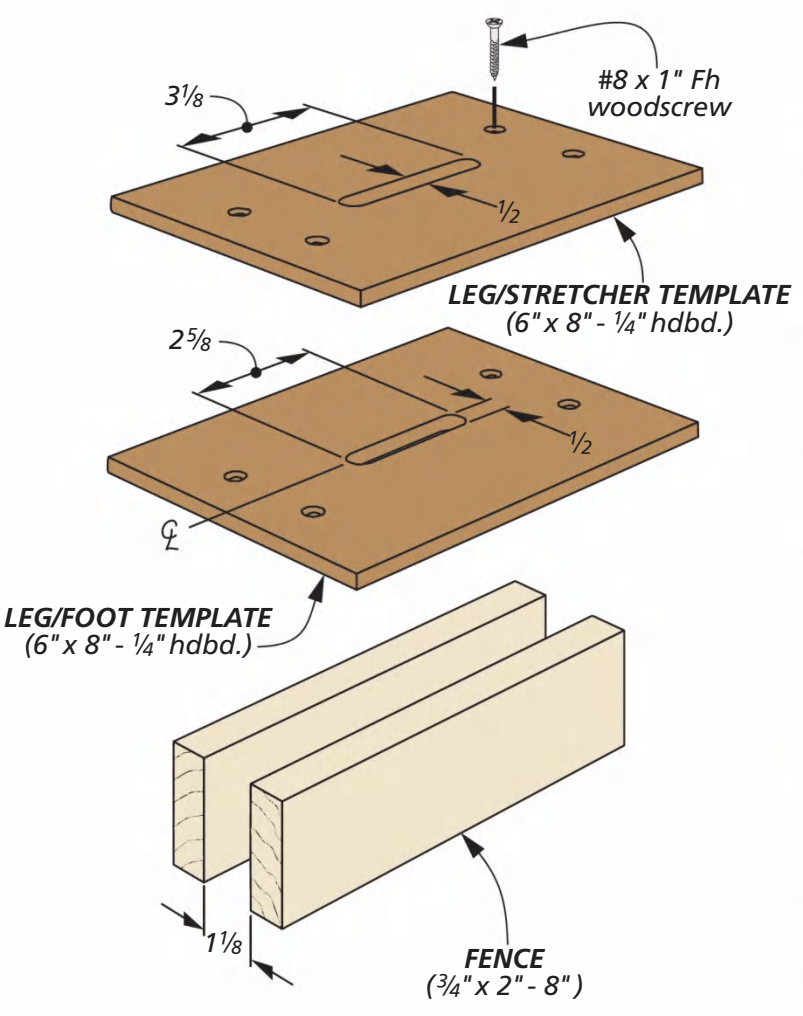

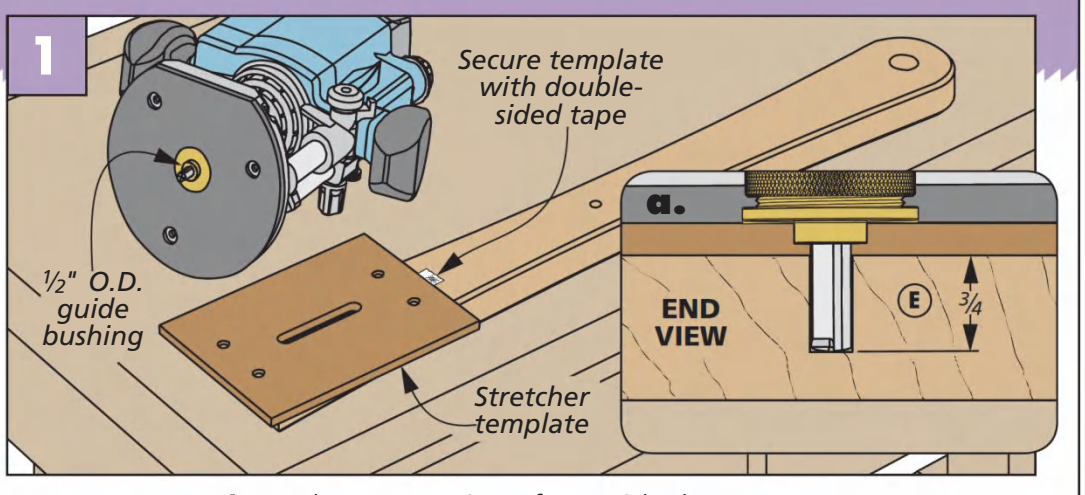

Leg Face Mortise. Clamps can interfere with the router, so use double-sided tape to secure the template to the workpiece.

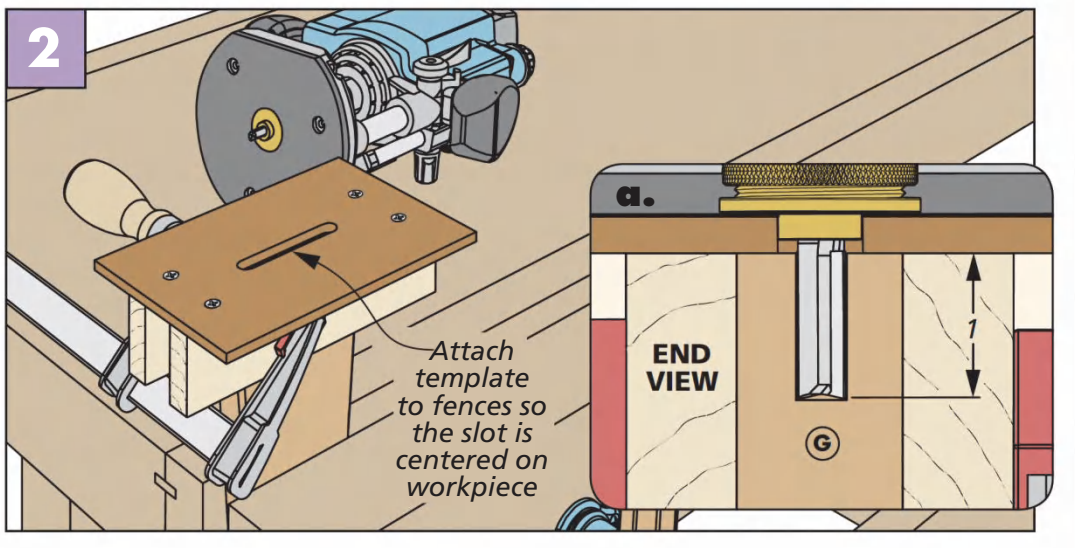

Add Fences. With a snug fit between the fences and the workpiece, an F-style clamp easily secures the jig to the workpiece.

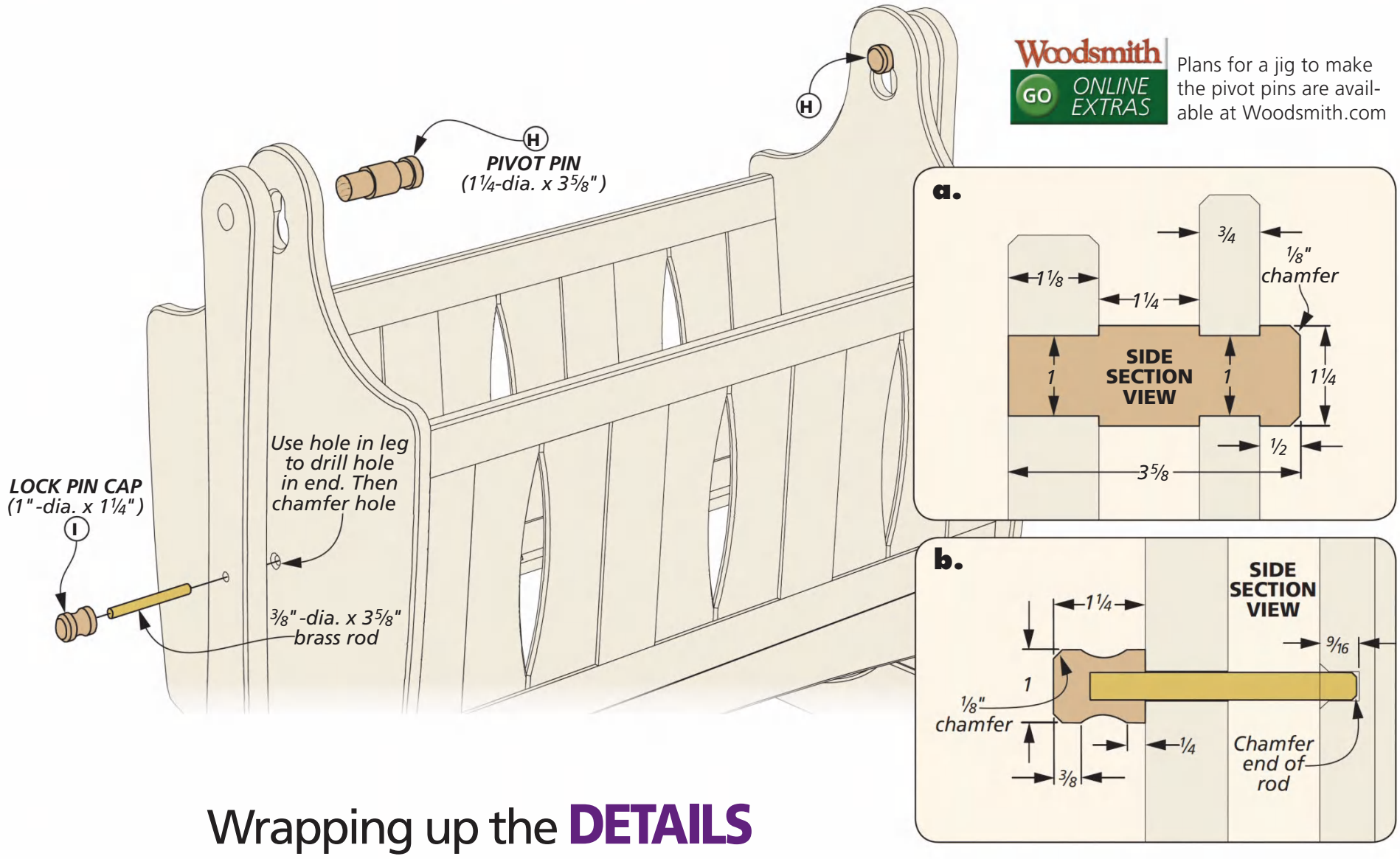

Woodsmith GO ONLINE EXTRAS

Plans for a jig to make the pivot pins are available at Woodsmith.com

Wrapping up the **DETAILS**

There are only a few final parts that you need to make for the cradle. However, these pieces offer some interesting challenges and a change of pace from your earlier work. First up are two sets of pins. One set is made from solid wood and forms the pivot points the cradle rocks on. The other pair are stop pins that prevent the cradle from rocking — a handy feature. These have a wood cap with a brass shaft.

PIVOT PINS. The pivot pins come first. To make these, I glued up thick blanks. The blanks are left extra-long for turning them on a lathe. Detail 'a' above shows the dimensions you'll need.

I realize that not everyone has a lathe. So the online extra at *Woodsmith.com* has instructions for making a table saw jig to create the pivot pins.

Once the pins are complete, you can fit the cradle to the base, gluing the pivot pins into the legs. Use the holes in the base to drill stopped holes in the cradle ends to house the lock pins.

LOCK PINS. Since the lock pins are smaller, I used a piece of brass rod for the shaft. However, I thought a brass or plastic cap wouldn't look right. So I made a wood cap to match the rest of the project. This process is detailed in the box below. It starts with making a round end

SHAPING CAP

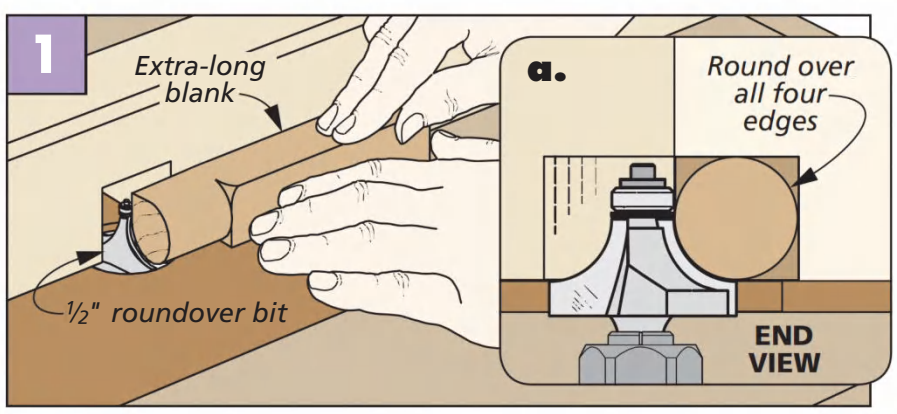

Cap Blanks. Make short roundover cuts on a long piece. Then drill a hole in the end and cut the cap to length.

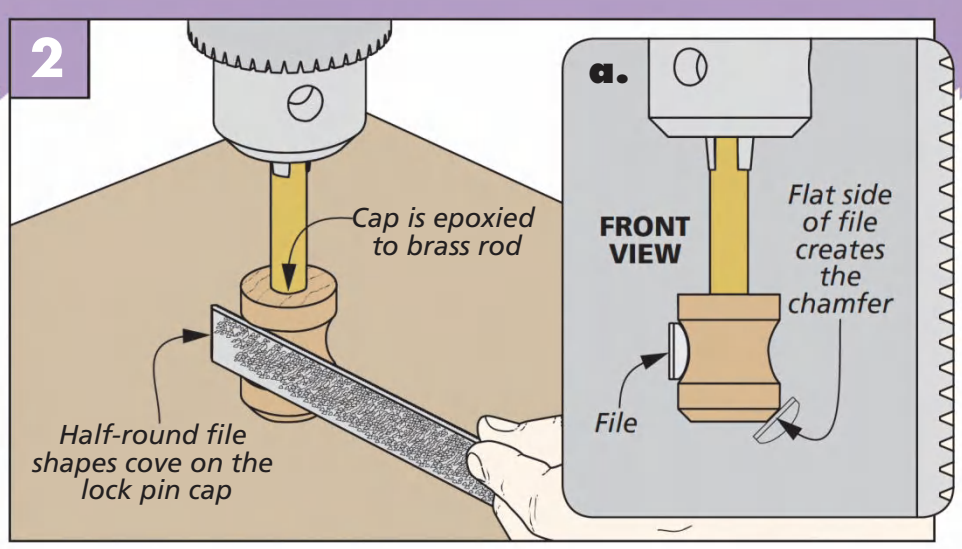

Shape Caps. Install the pins in the drill press and use files to shape a cove and chamfer. Smooth the surfaces with sandpaper.

on an extra-long blank using a roundover bit in the router table (Figure 1). Drill a hole in the end to accept the brass rod and cut the cap to length.

After gluing a piece of rod in place with epoxy, you need to shape the cap. For something small like this, I usually "turn" to my drill press.

Set the drill press speed pretty high — 1,500-2,000 RPM. For the shaping, files work better than lathe tools. The round side of a small half-round file forms the cove of the cap, as illustrated in Figure 2. Flip the file over to create a small chamfer on the end.

Polish things up with some sandpaper. And while the cap is still spinning, I like to finish pieces like this with some beeswax for a pleasing satin sheen.

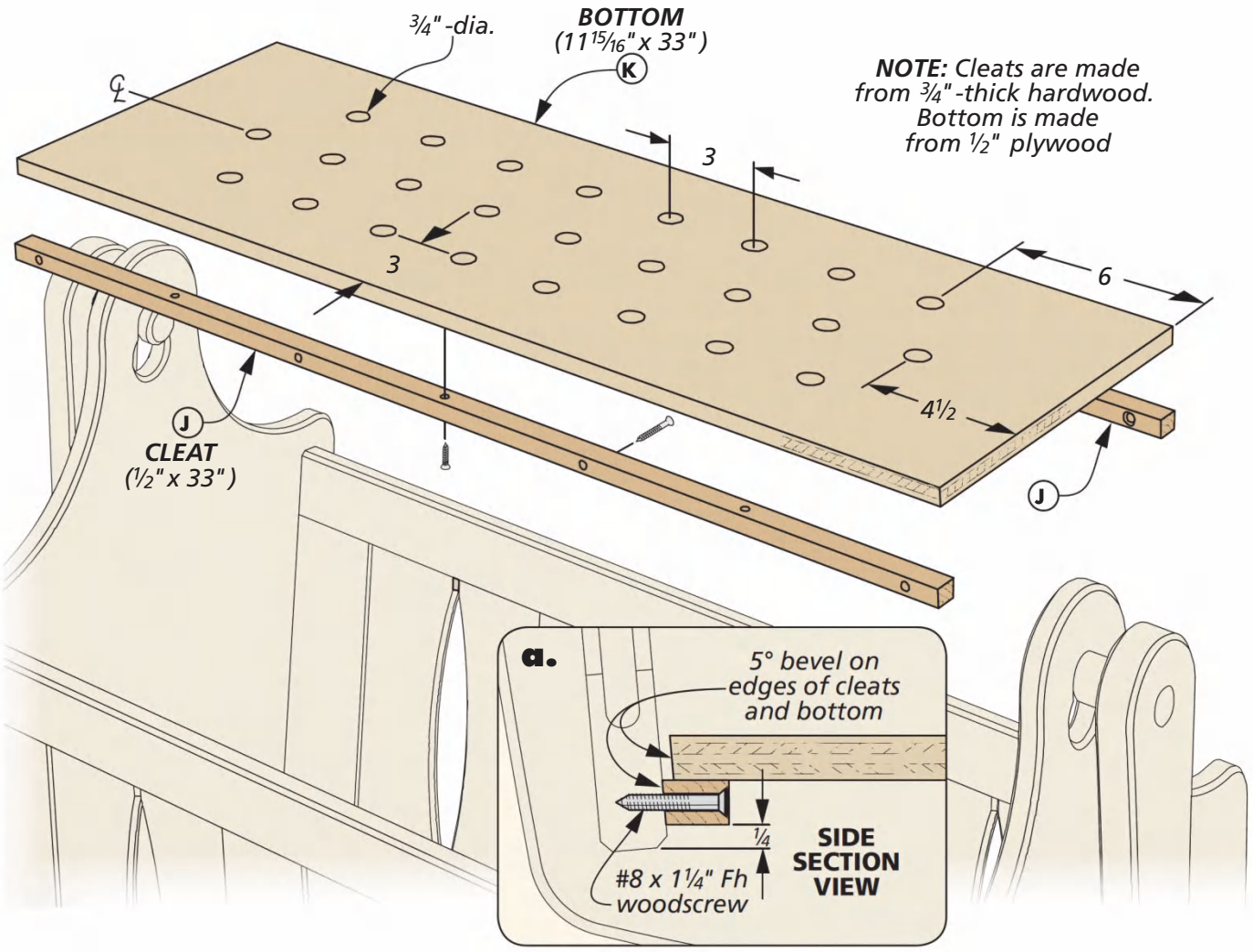

CRADLE BOTTOM

The bottom of the cradle is a piece of plywood. It rests on a pair of cleats screwed to the side assemblies (detail 'a' above). Both the cleats and the bottom are beveled to match the angle of the sides of the cradle.

I drilled an array of holes in the bottom to provide airflow for the foam mattress. Speaking of the mattress, I purchased one online (refer to sources on page 66).

The cradle is then ready for the finish of your choice. Now it's only a matter of waiting for the baby to arrive. W

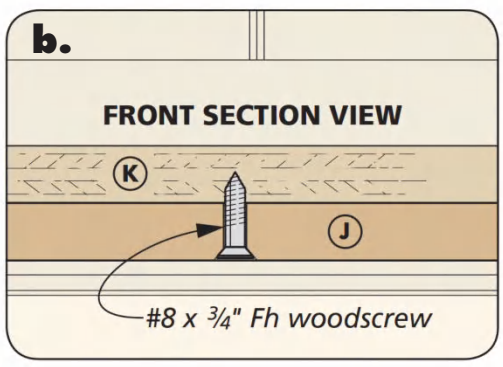

Materials, Supplies & Cutting Diagram

A	Ends (2)	¾ x 18 - 25
B	Rails (4)	¾ x 2 - 33
C	Stiles (8)	¾ x 3 - 10
D	Panels (12)	⅜ x 3⅞ - 10 ¾
E	Legs (2)	1⅛ - 4 x 30
F	Feet (2)	1⅛ - 4 x 20
G	Stretcher (1)	1⅛ - 4¼ x 37
H	Pivot Pins (2)	1¼-dia. x 3⅝
I	Lock Pin Caps (2)	1-dia. x 1¼
J	Cleats (2)	¾ x ½ - 33
K	Bottom (1)	½ ply. - 11 15/16 x 33

- (1) ⅜" x 1½"- 16" Loose Tenon Blank
- (1) ⅜" x 2"- 16" Loose Tenon Blank
- (1) ⅜" x 2½"- 6" Loose Tenon Blank
- (1) ⅜" x 3"- 6" Loose Tenon Blank
- (2) ⅜"-dia. x 3⅝" Brass Rods
- (8) #8 x 1¼" Fh Woodscrews
- (6) #8 x ¾" Fh Woodscrews
- (1) 2" - 12"x 33" Cradle Mattress

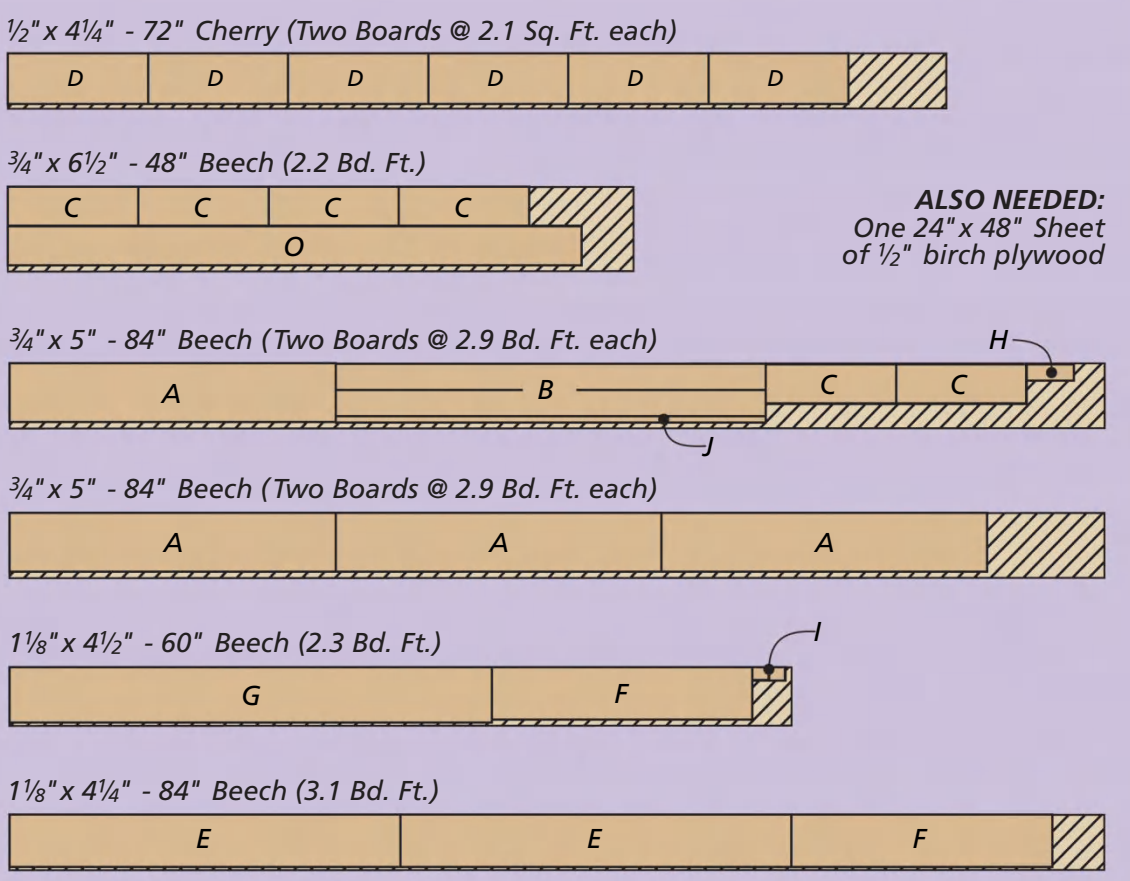

Vacuum Stabilizing

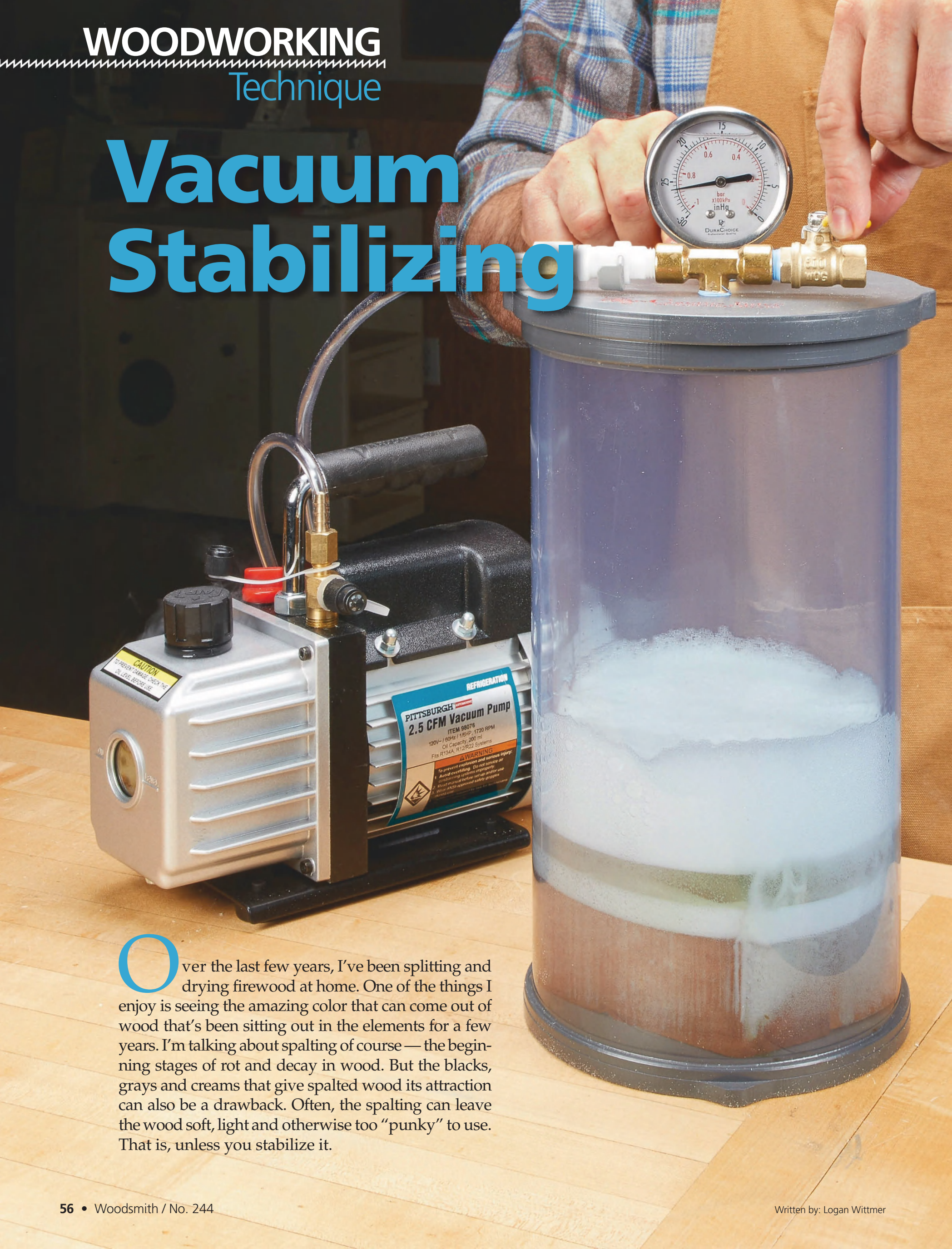

Over the last few years, I've been splitting and drying firewood at home. One of the things I enjoy is seeing the amazing color that can come out of wood that's been sitting out in the elements for a few years. I'm talking about spalting of course — the beginning stages of rot and decay in wood. But the blacks, grays and creams that give spalted wood its attraction can also be a drawback. Often, the spalting can leave the wood soft, light and otherwise too "punky" to use. That is, unless you stabilize it.

Written by: Logan Wittmer

WHAT IS STABILIZING? As you may suspect, stabilizing wood means making the structure of the wood more stable. But what does that entail exactly? Well, here I'm talking about vacuum stabilizing — using a vacuum chamber to infuse a piece of stock with resin. The process sounds somewhat mystical, until you start to delve into it.

Wood fibers are like a bundle of straws. When the wood is green, those fibers are filled with water. In dry stock, the fibers are full of air, along with a small amount of water.

When the wood is placed in a vacuum chamber, the air in the fibers of the wood is drawn out. Once the vacuum is turned off and the valve is opened, the pressure differential causes the resin to be forced into the wood.

WHY STABILIZE? I've already mentioned that soft, spalted wood benefits from stabilizing to harden it and make it more durable. But it's not only for punky wood — there are other reasons to stabilize wood as well.

Stabilizing reduces the effect that moisture has on wood, meaning it will expand and contract less with changes in humidity. It's great for items that will be exposed to occasional moisture, like knife handles, utensils, or game calls.

Another benefit of stabilizing wood is the ability to add a dye into the resin and infuse stock with color. This has been a favorite of turners making game calls (see the photo at right).

It's also worth noting that stabilizing makes the wood heavier. It adds weight and durability to items like mallet heads and tool handles.

THE NECESSITIES. To stabilize a piece of wood, there are a few things needed that you may not have in your shop. The photo below shows the necessary items. The main things are a vacuum chamber, stabilizing resin, a vacuum pump, and an oven for curing.

▲ Adding a dye to the resin allows you to achieve solid colors, as well two-tone colors such as emerald and gold.

The stabilizing resin I'm using here is non-toxic and cleans up easily with water. To see where I got mine, refer to Sources on page 66.

To cure the resin, you'll want an oven that can hold a temperature between 185-200°. A toaster oven works well. Even though the resin is non-toxic, avoid putting chemicals in any oven you use for food preparation. In addition, I'd suggest picking up an inexpensive oven thermometer so you can accurately monitor the temperature of the oven during the curing.

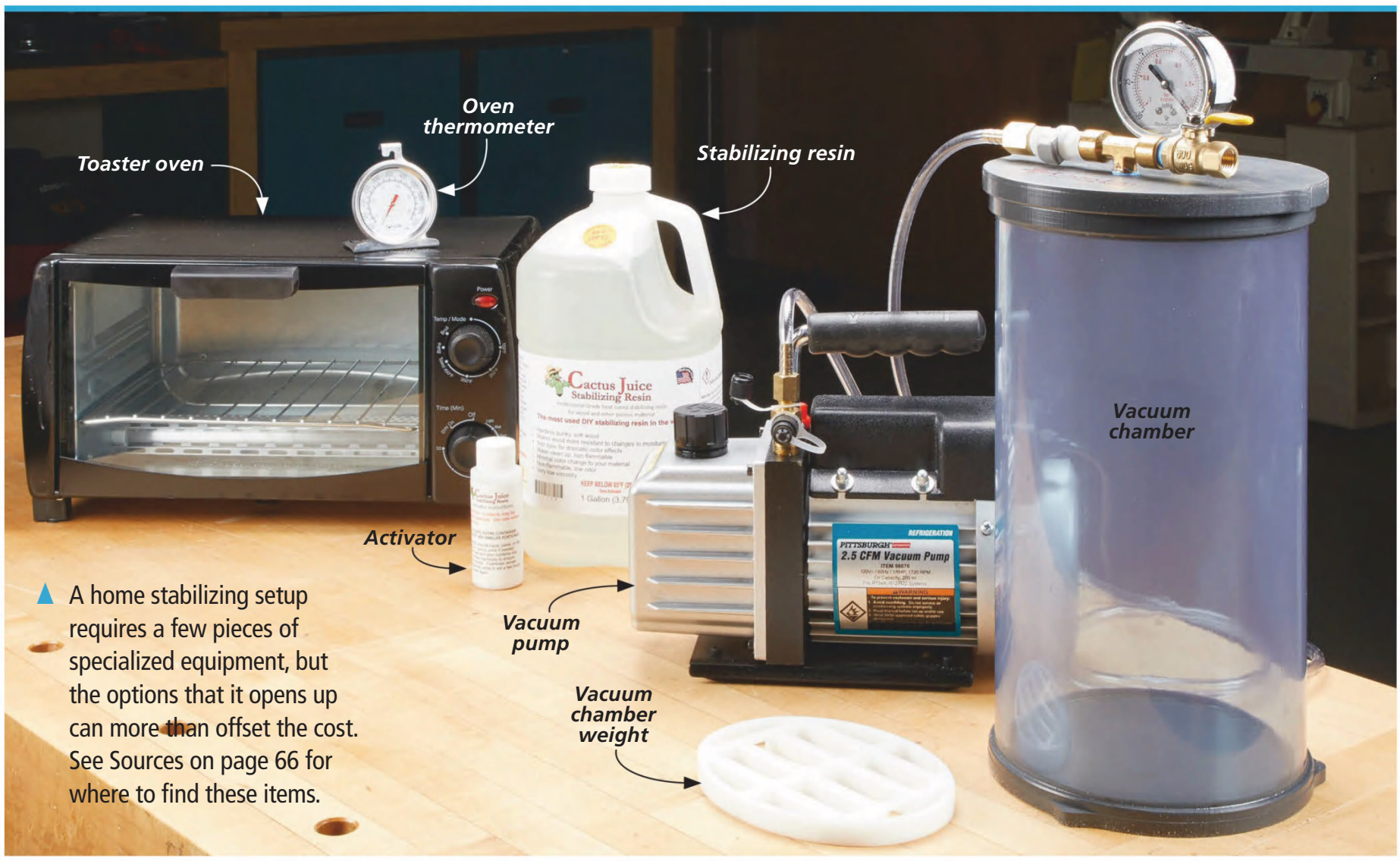

▲ A home stabilizing setup requires a few pieces of specialized equipment, but the options that it opens up can more than offset the cost. See Sources on page 66 for where to find these items.

Illustrations: Bob Zimmerman

Certain types of resin can be reused. Stored in a plastic container with a lid, it has a shelf life of up to one year after mixing in the activator.

THE PROCESS

As far as blanks go, any porous material can be stabilized. The biggest thing is to make sure it's dry. A moisture content of 10% or less is necessary, but for the best results, dry the blanks in your oven for 24 hours at 220°. Your goal is to get the blanks as close to 0% moisture as you can.

INFUSE THE RESIN. After your blanks are dry, let them cool in a sealed bag until you're ready to place them into your vacuum chamber. Weight is needed to keep the blanks from floating in the resin. The chamber I used has a friction fit plate that keeps them submerged, but a steel plate works as well.

The resin comes in two parts (lower right photo, previous page). A small bottle of activator is mixed into the resin before adding it to the blanks. Add enough resin to the chamber to cover the blanks by one to two inches. Then you can open the valve on the lid and place it on the chamber.

Turn your vacuum pump on and slowly close the valve. The blanks will start to bubble, and the resin will foam up. Cracking the valve back open will reduce the foaming. It will take a few minutes for the foaming to get under control, so pay close attention during this time so you don't suck resin into your pump.

Once the valve is closed and the chamber is under full vacuum, let the vacuum pump run until the blanks stop producing bubbles. This can take anywhere from 6 to 15 hours, depending on the blanks.

After the bubbles stop, open the valve to release the vacuum, then shut off the pump. The blanks now need to remain in the resin, as this is when they actually absorb the resin. Keep an eye on the resin level and add more as needed (make sure the blanks are always covered).

To cure the blanks, wrap them in foil and bake them in a toaster oven between 180°-200°. The foil helps contain any bleed out that can happen as the resin cures. As an added precaution, I wrap the lower tray with aluminum foil as well, catching any resin that seeps out of the blank packets.

The rule of thumb is to soak the blanks at least twice as long as they were under vacuum.

TIME TO CURE. With your blanks sufficiently soaked, you can pour off the remaining resin into a plastic container (top photo on the previous page). It has a one-year shelf life after adding the activator, so save it for later use.

Now you need to cure the resin in the blanks. To do this, turn your toaster oven on and set it to 200°. The resin must cure between 185-200°, so monitor it closely. Anything above 200° will cause excess bleeding of the resin.

Be aware that a little resin will bleed out no matter what, so wrapping the blanks in foil will contain most of the mess (lower left photo on previous page).

After your blanks have cooked for an hour and a half to two hours, you can peek in the foil and make sure there's no liquid inside. If they're dry, you can remove them. Just be aware that once removed and cooled, they cannot be re-cured. So, I've been baking them longer — some larger blanks I've left in the oven for up to four hours. Longer won't hurt them.

WORKING THE BLANKS. One thing that a lot of people are curious about is how well stabilized blanks machine? Honestly, stabilized wood turns easier than anything I've ever worked with. The resin in the wood creates more friction, so they turn a little warmer. Likewise, burnishing a turning with chips or burlap produces more heat much faster than raw wood.

As far as milling with power tools goes, such as small flat parts like knife scales, besides a little extra weight, you won't notice much of a difference.

One of the things I've been pleasantly surprised with is the way that stabilized wood finishes. Not only does it take a finish like raw wood, but the resin allows it to take a polish like a dream. Sanding to 2000-grit and friction buffing with a little bit of beeswax is about the nicest finish I could hope for.

FINAL THOUGHTS. Is adding a stabilizing setup for everyone? Maybe not. But, I haven't had this much fun with one single aspect of woodworking in a very long time.

When making specialty items like pens, game calls, or knife scales, I wouldn't want to work with them any other way. The durability, versatility, and options that stabilizing opens up are worth noting. As a turner or knife maker, you'd benefit from adding a wood-stabilizing setup to your shop. Being able to use a special piece of wood and use it without worrying about the structural integrity is a treat. W

Thanks to TurnTex, LLC for providing the vacuum chamber, resin, and dyes for this article.

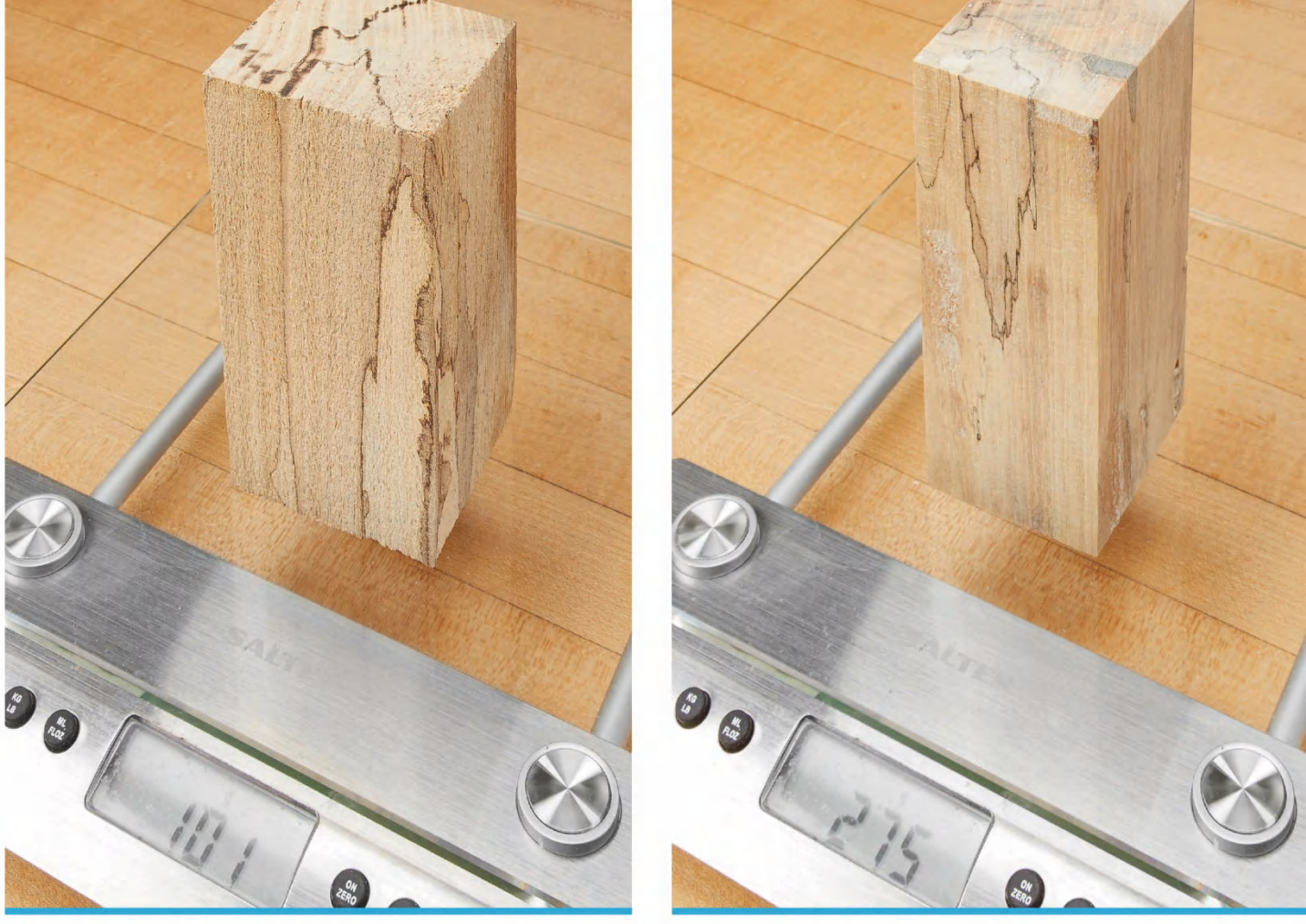

▲ Stabilizing wood dramatically increases the weight of a wood blank. As you can see, the spalted maple blank weighs 101 grams before stabilizing. After stabilizing, the blank is now 275 grams, or nearly three times heavier.

▼ Stabilized blanks have numerous uses. Pen makers enjoy the ability to add color to blanks and stabilize the thin wood bodies of pens for turning. The added moisture resistance make stabilized blanks perfect for items like shaving kits, game calls, or knife scales.

Sliding Dovetail Joints

Written by: James Hamilton

It's a wonder that the sliding dovetail joint hasn't made the dado a relic of the past. They're stronger than traditional dados, their mechanical properties make casework assembly virtually clamp-free, and they have the look of true craftsmanship.

But don't let their good looks fool you. Sliding dovetail joints aren't difficult to make. And once you master them, you'll never look at a traditional dado the same way again.

Sliding dovetail joints consist of a dovetail-shaped socket in one workpiece and a matching tongue in the mating piece. In this article, I'll walk you through the creation of three variations of sliding dovetail joints — standard, tapered, and shouldered.

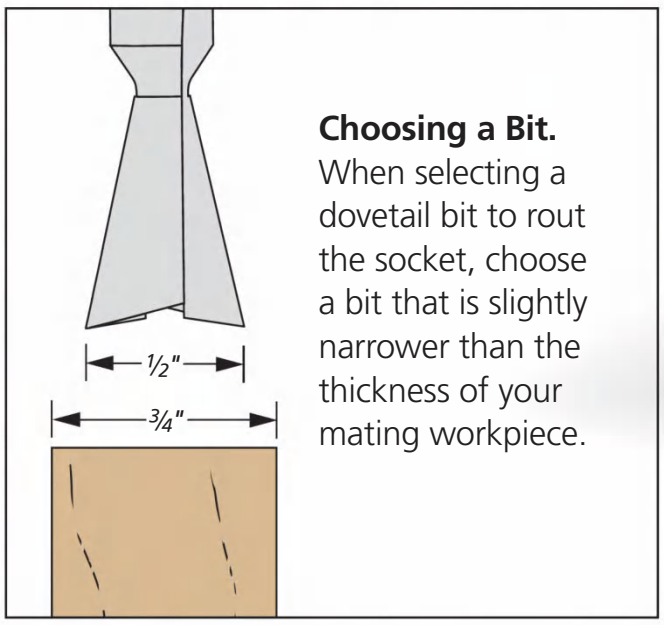

Choosing a Bit. When selecting a dovetail bit to rout the socket, choose a bit that is slightly narrower than the thickness of your mating workpiece.

You'll use the same router bit to rout both halves of the sliding dovetail joint.

JOINT SIZE & BIT SELECTION

There are no strict rules when it comes to choosing the size of your sliding dovetails. But there are a few guidelines to follow for achieving the strongest, best-looking joints possible.

While a dovetail socket as shallow as ⅛" will produce a durable joint, sockets that are one-half to two-thirds the thickness of the workpiece produce stronger, more attractive joints.

The width of your dovetail bit must be less than the thickness of the mating workpiece. For ¾"-thick material, a ½" dovetail bit is a good choice.

The angle of the dovetail is a matter of personal preference. I prefer a steeper angle for a more dramatic look.

A SIMPLE SLIDING DOVETAIL JOINT

The first step in any sliding dovetail joint is to cut the socket, which is little more than a dovetail-shaped dado or groove. Unless you're working with very small workpieces, it's unlikely your router table has the fence capacity for this step. A better choice may be a hand-held router and a straightedge guide.

WASTE FIRST. To reduce the stress on the bit, I prefer to first cut a simple dado with a straight bit that is no wider than the neck of my dovetail bit (Figure 1). Then, without moving the edge guide, I replace the straight bit with a dovetail bit (set to the same depth) and use it to complete the dovetail shape of the socket, as shown in Figure 2.

This extra step may seem unnecessary, especially if you're using a robust dovetail bit that is unlikely to break. But this will also clear the chips more efficiently, reducing heat that may prematurely dull your bit.

One way to speed up the process is to use two routers; one with a straight bit and another with a dovetail bit. Just be certain that the baseplates on both routers are identical in size so both cuts align perfectly.

Often, routing sliding dovetails can cause chipout on the edge of a workpiece. The box on the bottom of the next page has tips for dealing with this problem.

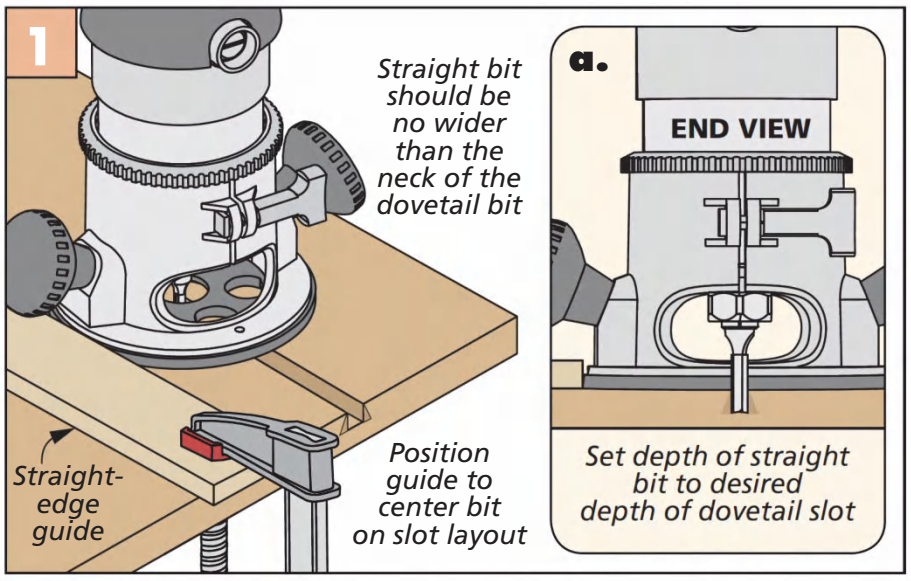

Start With a Straight Bit. With a straightedge guide clamped to the workpiece, rout away the bulk of the waste from the slot using a straight router bit.

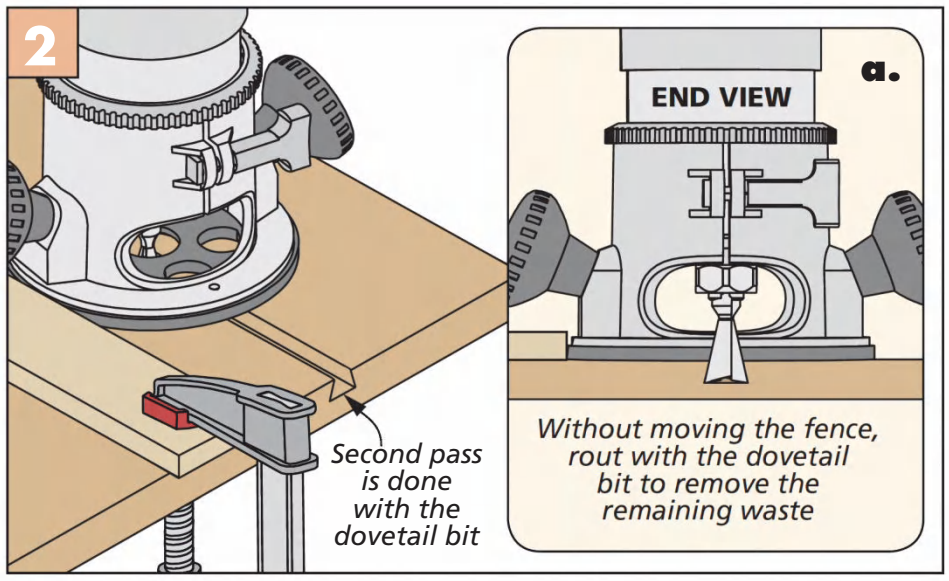

Move On to the Dovetail Bit. Leaving the straightedge guide in place, swap out the straight bit for the dovetail bit and complete the slot.

Illustrations: Bob Zimmerman

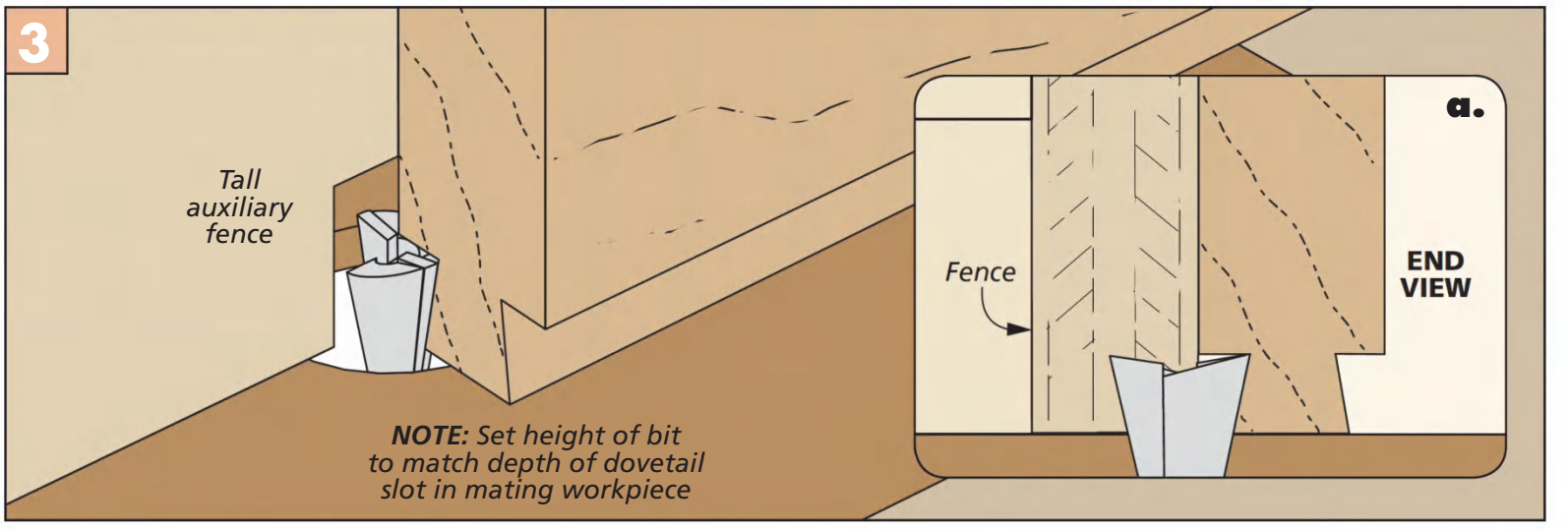

Create the Tongue. With an auxiliary fence mounted to your router table, set the dovetail bit to the same height as the depth of the socket. Take light passes on both faces of the workpiece, slightly moving the fence away from the bit and checking the fit in the socket until you sneak up on a good fit.

ROUTING THE TONGUE

The second part of the sliding dovetail joint consists of cutting a dovetail-shaped tongue on the mating workpiece. Because of the orientation of the cut, a router table with a tall fence is the best tool for this job.

If your router table fence is less than six inches tall, consider adding an auxiliary fence to the front to provide adequate support for your workpieces to prevent them from tipping during these critical cuts. Check to be sure the face of the fence is square with the top of the router table, shimming as needed.

The tongue is cut with the same dovetail bit you used to make the socket. The height of the bit must be set precisely to match the depth of your socket or the joint will not fit together correctly. A good depth gauge or combination square will make this an easy task.

SET THE FENCE. The initial position of the router table fence is less critical for this part of the process because you'll be sneaking up on a perfect fit rather than cutting the tongue all at once. Figure 3 shows the process.

Begin by setting your fence so just the tips of the dovetail bit are exposed. Then you make a pass on each face, holding the workpiece firmly against the fence.

Check the fit, then move the fence back a small amount to expose more of the bit and repeat the process until the joint slides together smoothly. The tongue should fit into the slot with light hand pressure only. A joint that fits together too tightly will be difficult to assemble once glue is applied.

TAPERED SLIDING DOVETAILS

A standard sliding dovetail like the one I just described works best on fairly narrow workpieces. The wider the workpieces are, the more difficult they are

TAMING TEAROUT

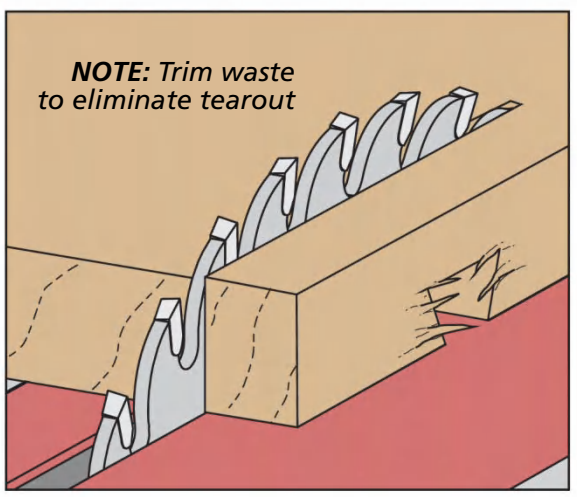

Extra-Wide Workpiece. One way to tame tearout is to start with a wider workpiece, trimming the piece to final width after routing the dovetail slot.

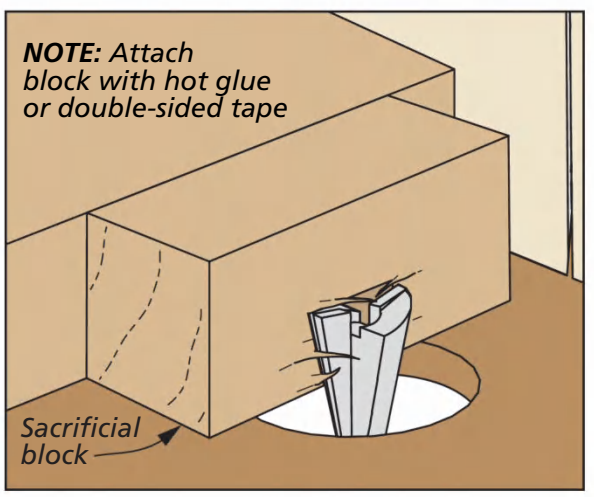

Add a Block. If your workpieces are already cut to finished size, you can glue a sacrificial block to the back edge and trim it off after routing the slot.

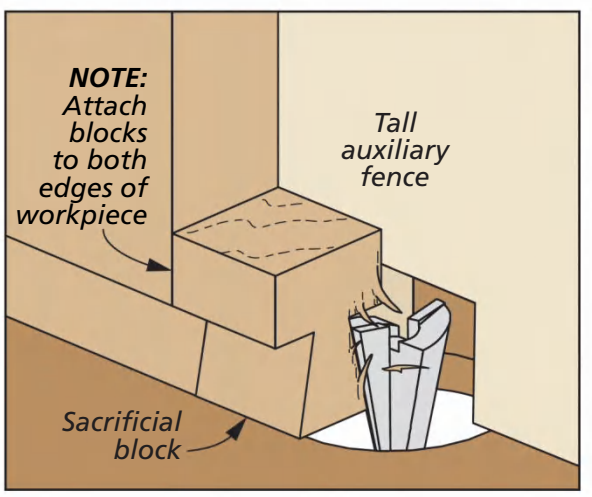

A Clean Tongue. The same technique works when routing the tongue. Just be sure the sacrificial block is the same thickness as your workpiece.

to assemble. Not only does friction work against you, but the glue will swell the fibers and all the pounding in the world won't get that joint together.

This is where tapered sliding dovetails come in. In this variation, both the dovetail and the socket are slightly tapered, making assembly easier. They're ideal for large casework and only require a bit more effort to create than a standard sliding dovetail.

CREATING THE OFFSET. The joint begins with a narrow dado that is widened into a dovetail shape as in the previous joint. But prior to removing the straightedge guide, you'll offset it at one end by 1/16". Then, make another pass with the dovetail bit to create the taper.

I like to draw a line along the edge of the straightedge guide, then use a 1/16"-thick spacer to precisely position the end of the guide back from the line (left drawing below). This spacer will come into play again later.

WHICH END? Which end of the edge guide do you offset? Since the dovetail shape of the joint will be skewed where the taper begins, I prefer to put that side on the back of the project where it won't be seen. This way, you don't have to worry about your router bit striking and tearing out the cut when you begin routing.

When it comes to cutting and fitting the tongue, use the same multiple-pass process as before. But this time, you'll use the spacer to create a taper on one face that's equal to the taper you put in the socket. The result will be a joint that goes together loosely at first, but tightens as it comes together.

THIRD VARIATION. One other form of sliding dovetail that I often employ is a shouldered dovetail. This joint has the benefit of additional strength, as well as an attractive appearance. You can read more about it in the box at the bottom of the page.

In their various forms, sliding dovetail joints are both strong and versatile. But I like them for a more selfish reason — they make my projects look like they were built by a true craftsman. Try one in your next project and see for yourself. W

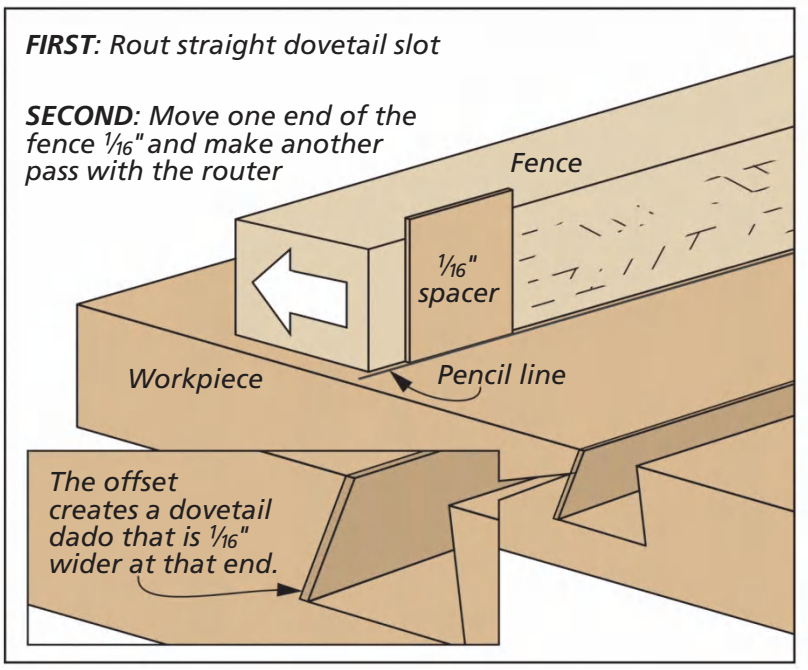

Tapered Dovetail Slot. To taper the slot, start by creating a straight dovetail slot. Then, shift the straightedge guide slightly to create an offset and make another pass with your router.

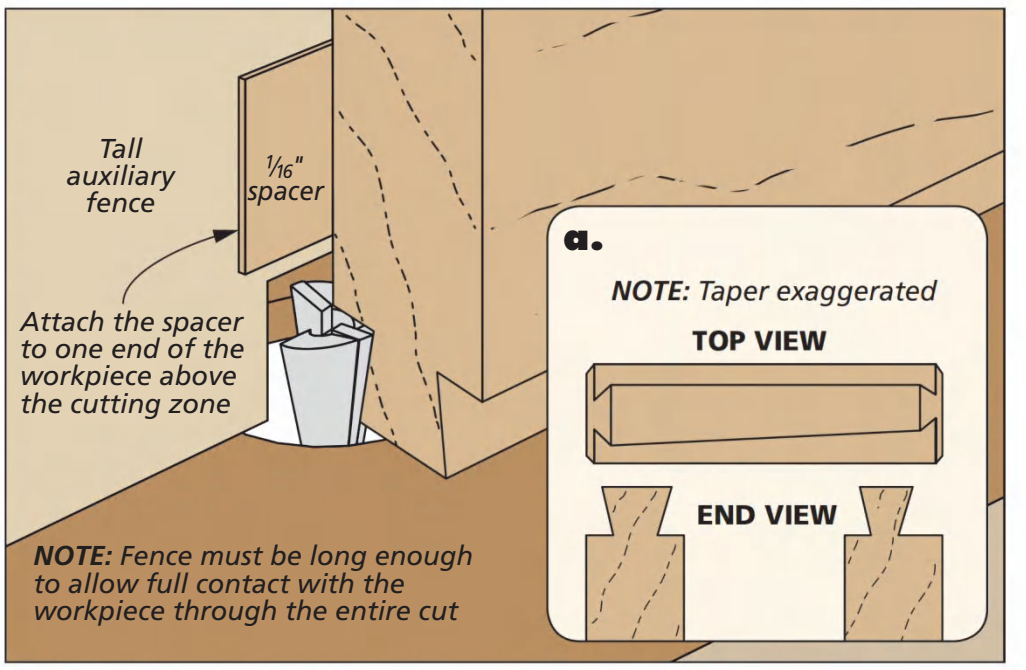

Tapered Tongue. To create a tapered tongue, attach the spacer to one end of the workpiece and then rout the tongue by removing material from both faces until the tongue fits into the slot. Note that only one side of the tongue will be tapered.

SHOULDERED SLIDING DOVETAILS

Strong & Attractive. The shouldered sliding dovetail is a stronger, arguably more attractive variation of the sliding dovetail. It's made by first cutting a shallow dado in the slot workpiece. Once you've done that, the rest of the joint is accomplished by following the previously detailed sliding dovetail technique. The resulting joint is made stronger because of the shoulders on either side.

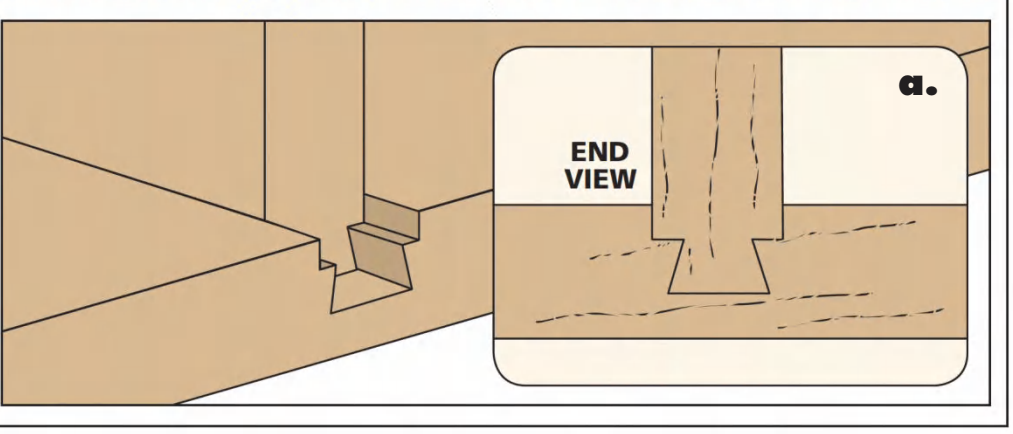

Creating a Crackled Finish

A crackle medium makes it easy to get dramatic results when creating a crackled finish.

One of the easiest ways to give a project an aged or antique look is by applying a crackled paint finish. This simple procedure creates a maze of tiny cracks and fissures in the surface of the paint, mimicking the look of a piece that's decades old. This technique was used to finish the shadow boxes you see above and on page 18 .

Crackling was traditionally done using hide glue (see box on next page). But you can also use a crackle medium designed specifically for this purpose, like the one shown at left. (Refer to page 66 for sources.)

Creating a crackled paint finish is a three-step process, which I'll walk you through. But before getting started, I'd like to emphasize that if you've never tried this finishing technique, it's a good idea to experiment on some practice boards first, just to get a feel for the process.

BASE COAT. The first step is to apply a base coat of latex paint (upper left photo on next page). A satin or eggshell sheen is best for this coat. I like to choose a color that contrasts well with the final layer of paint. This contrast helps the cracks to stand out better. Simply apply it like you would any paint, and let it dry thoroughly (at least 8 hours).

CRACKLE MEDIUM. The second step is to apply the crackle medium. Start by stirring the product to mix it, but don't thin it.

Written by: Vincent Ancona

Start by applying a base coat of latex paint to your project. A satin or eggshell sheen works best here.

After the base coat is dry, apply an even coat of the crackle medium to all the surfaces of your project and let it dry.

Apply an even coat of a contrasting flat latex paint, taking care not to overbrush. The cracks will begin to appear immediately.

Spraying the medium on will yield the most consistent results, but a roller or brush (which is what I used) will also work. Just avoid overbrushing. Aim for even coverage over the entire surface (middle photo above). A thicker layer of the medium will yield larger cracks.

Allow the crackle medium to dry to the touch (at least 45 minutes). However, for best results, you'll want to apply the final coat of paint within six hours of applying the crackle medium.

FINAL COAT. The third and final step of the process is to apply a top coat of paint. Here again, use a latex paint. But for this coat, a flat sheen works better. There are a few tips when it comes to applying the final coat.

First, it's important to apply the paint in a single stroke with a brush that is well-loaded with paint. Avoid back brushing or back rolling the paint, and avoid the temptation to go back over painted areas. Doing so may prevent the crackling process from working to its full effect.

If you apply the paint in long, straight strokes, the cracks will tend to run in one direction only — which doesn't result in the most interesting appearance. In order to create a more random crack pattern, apply the paint with cross-hatch brush strokes.

Like magic, the paint will begin to crack almost immediately, exposing the base layer of paint below (right photo above). Once the paint is dry, you can leave it as-is or apply a clear, non-waterbased finish to seal it.

Not only is crackled paint a great way to give your next project a distinctive look, it actually turns watching paint dry into an exciting experience. W

HIDE GLUE CRACKLE EFFECT

Crackled finishes have been around for decades. Before there were commercially prepared crackle mediums like the one we used, the process was traditionally done using hide glue. In fact, liquid hide glue is still used for this purpose today.

The process is essentially the same. You start by applying a base coat of latex paint and let it dry thoroughly. Then brush on a coat of liquid hide glue. (You can thin the glue down with water to make it easier to apply, but just don't add more than 50% water.) Once the glue is dry, apply your top coat of paint, taking care not to overbrush your strokes. The crackle effect will occur almost immediately.

The hide glue absorbs moisture from the top layer of paint. This causes the paint to pull apart, leaving behind a maze of cracks.

Sources

Most of the materials and supplies you'll need to build the projects are available at hardware stores or home centers. For specific products or hard-to-find items, take a look at the sources listed here. You'll find each part number listed by the company name. See the left margin for contact information.

MAIL ORDER SOURCES

Project supplies may be ordered from the following companies:

Woodsmith Store
800-444-7527
store.woodsmith.com

Rockler
800-279-4441
rockler.com

A Baby
877-552-2229
ababy.com

amazon.com

General Finishes
800-783-6050
generalfinishes.com

Hangman Products
hangmanproducts.com

Harbor Freight
harborfreight.com

House of Antique Hardware
888-223-2545
houseofantiquehardware.com

Kreg Tool
kregtool.com

MagCraft
888-774-6005
magcraft.com

McMaster-Carr
630-833-0300
mcmaster.com

MLCS
mlcswoodworking.com

MSC Industrial Direct
877-607-7123
mscdirect.com

TurnTex, LLC
turntex.com

COMPASSES & DIVIDERS *(p.10)*

Compasses and dividers can be found at most office supply stores, or at *Amazon.com*.

TRACK SAWS *(p.14)*

- **Kreg Tool**
  Master Kit ACS3000
  Plunge Saw & Kit ACS2000
- **MLCS**
  Track Saw 9661

SHADOW BOXES *(p.18)*

- **MagCraft**
  Rare-Earth Magnets . NSN0732
- **Hangman Products**
  12" Z-hanger *Z-12*
  18" Z-hanger *Z-18*
  30" Z-hanger *Z-30*

The shadow boxes were painted with a base coat of *Benjamin Moore* "Amherst Grey." After applying the crackle medium, a coat of *Benjamin Moore* "Bone White" paint was applied.

ENTRY DOOR *(p.24)*

- **House of Antique Hardware**
  Entryset. . . .RS-05EM-3508-HEX
- **Amazon**
  B. B. Hinges B075VWKZR4
- **MSC Direct**
  ½" Roughing bit 91192161

Before purchasing the entry-set for the craftsman door you need know swing direction and handle side of your door. The hardware provider will help you with your selection.

The craftsman door was finished with *General Finishes* "Candlelite" oil-based gel stain. The door was sprayed with multiple coats of UV-rated polyurethane.

WORKSTATION *(p.34)*

- **McMaster-Carr**
  Threaded Knobs 2454K62
  10" Drawer Slides . . .11435A11
  20" Drawer Slides . . 11435A26
  24" Drawer Slides . . 11435A28
- **Rockler**
  Grommet 57058
  5" Casters 37138
- **Amazon**
  4" Plastic Pulls B00N3UMSDQ
  6" Plastic Pulls . . B07R9K8ML7

To finish the workstation, I sprayed it with multiple coats of spray lacquer. The remaining hardware for the workstation is available at most local hardware stores.

CRADLE *(p.46)*

- **A Baby**
  Custom Cradle Mattress. .Varies

To finish the cradle, I started with a coat of wiping varnish to warm up the color of the beech and cherry. Then I applied a couple of coats of satin lacquer.

VACUUM STABILIZING *(p.56)*

- **TurnTex, LLC.**
  6" Vacuum Chamber . . . .Varies
  Cactus Juice Resin . . . . . Varies
  Resin Stabilizing Dye . . . . Varies
- **Harbor Freight**
  2.5CFM Vacuum Pump 98076

CRACKLE FINISH *(p.64)*

- **Amazon**
  Crackle Medium . . B000I1QDBQ

RAZOR-SHARP EDGES in 5 Minutes!

The *Woodsmith* Cabinet Scraper System offers a fool-proof method for getting a consistent, razor-sharp edge using only a few simple tools. The secret is in the *Woodsmith* jig—a unique tool that lets you file the edge and then create the bur.

Item# 7512124
Woodsmith Cabinet Scraper System $59.99

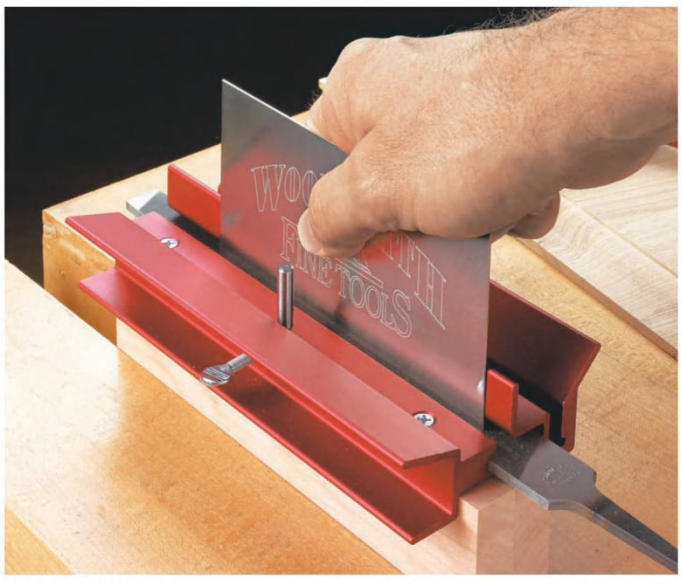

classified Marketplace

Woodsmith PLANS

DOWNLOAD & PRINT YOUR PLANS AT HOME!

Hundreds to choose from for home, gift and shop!

PLUS VIDEO PLANS!

Each video plan includes a 26-minute video and a detailed printable plan.

WoodsmithPlans.com

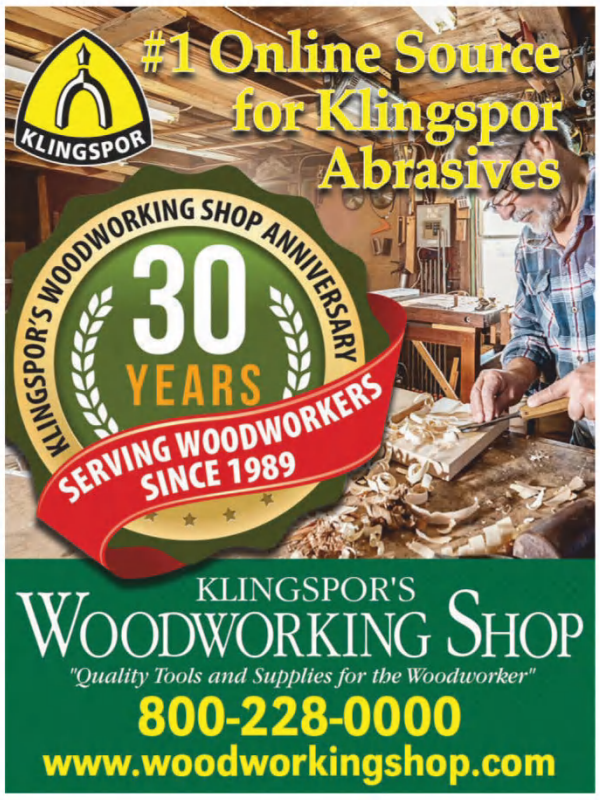

Woodshop News presents

WOODWORKERS SHOWCASE

A new Marketing site connecting professional woodworkers with qualified buyers

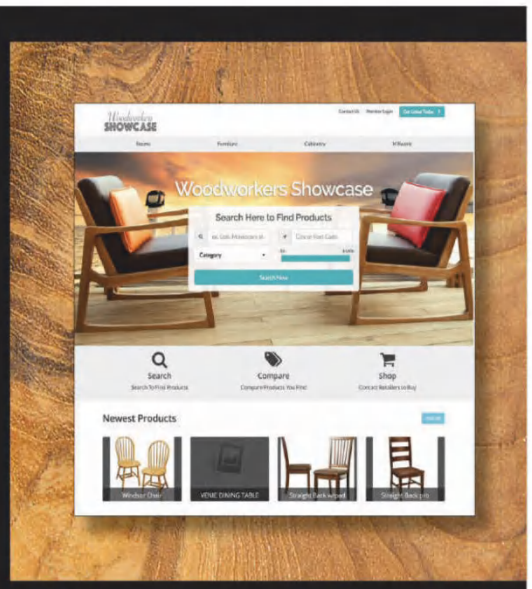

Woodshop News introduces Woodworkers Showcase, a new website where artisans, furniture, cabinet and architectural millwork shops can market their work to an established audience of high-end buyers.

Woodworkers Showcase's primary audience are readers of other Active Interest Media (publisher of *Woodshop News*) titles, such as *Craft Homes, Old House Journal, Log Home Living, Period Homes, Power & Motoryacht, Yachts International, Soundings, PassageMaker, Sail,* and *Angler's Journal*. These readers know and understand that quality products are worth it.

sales@woodshopnews.com

THE MARKETING OF THIS SITE WILL COVER

COMBINED REACH

Total print & digital distribution
OVER 2 MILLION MONTHLY

Total monthly web site page views
OVER 2.5 MILLION MONTHLY

Average House Hold income
$193,744

https://www.WoodworkersShowcase.com/

Woodsmith

Fine Tools Steel Rules

- ►**Steel rules** with no-glare satin finish
- ►**Acid-etched graduations** won't wear off
- ►**Handy center-finding rule** on one face
- ►**Both left and right-reading** scales
- ►**1/16" and 1/32"** increments

As seen on the Woodsmith SHOP TV SHOW!

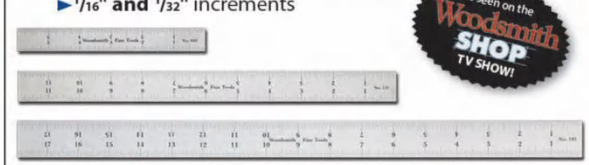

Order @ www.store.Woodsmith.com

- ► Get a video tip sent to you every week
- ► Includes a printable, step-by-step tip
- ► Ready when you are — on any device

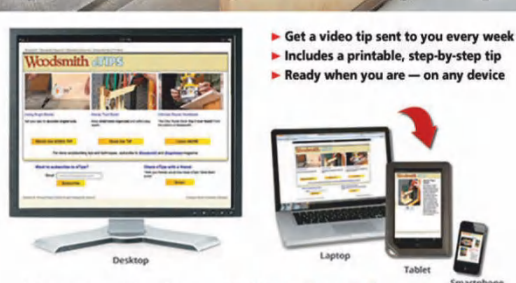

Sign up today at Woodsmith.com

IT'S TIME TO STEP UP TO THE GOLD STANDARD

MEET THE NEWEST MEMBERS OF THE POWERMATIC FAMILY.

POWERMATIC®

THE GOLD STANDARD SINCE 1921

Woodsmith

Back Issue Library **Online**

An Incredible **VALUE!**

- Access every issue of Woodsmith ever published — over 228
- Get over 4,000+ projects, tips and techniques.
- Enjoy instant online access on your computer, laptop — even tablet.

Order for **$79**

Get the USB Flash Drive for $20 MORE!

LEARN MORE at www.woodsmithlibrary.com

Sign Up for Free Weekly eTips

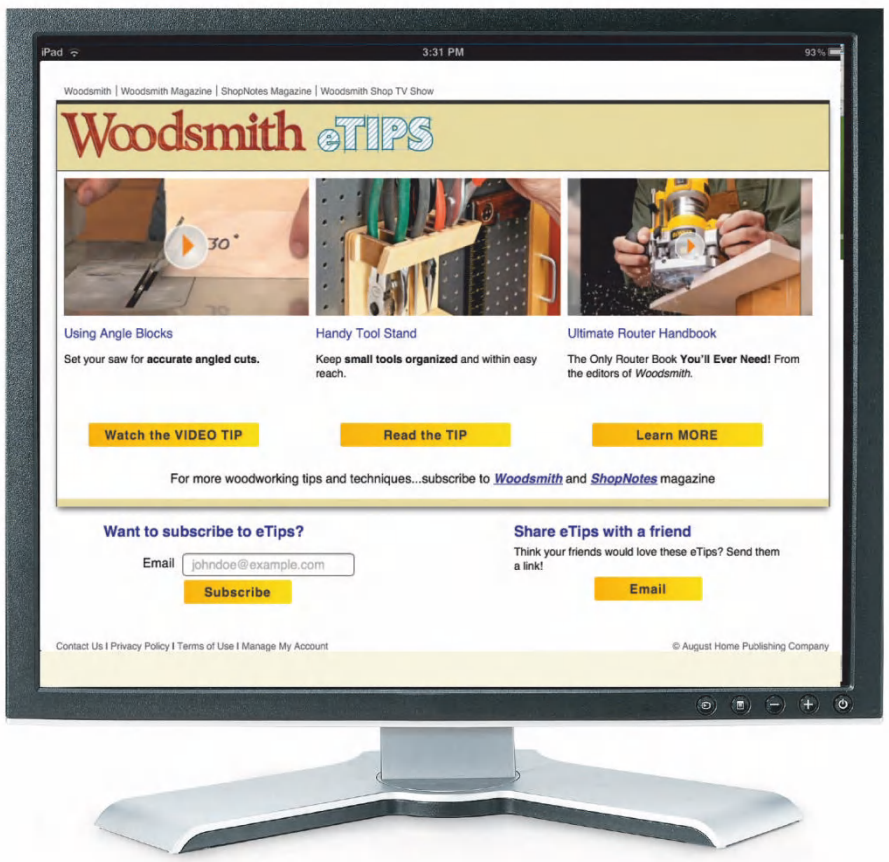

Desktop

- Get a video tip sent to you every week
- Includes a printable, step-by-step tip
- Ready when you are — on any device

Laptop

Tablet

Smartphone

Sign up today at Woodsmith.com